Dialight

SafeSite® LED Floodlight - UL 844

for Indoor & Outdoor Hazardous Applications

Features & Benefits

- 10 year warranty
- L70 rated for >100,000 hours @ 25°C ambient
- DLC listed
- Instant on/off operation
- Universal input (100-277 VAC, 50/60Hz or 347/480 VAC, 60Hz)
- Superior color rendering index compared to HPS, LPS, MH
- Resistant to shock and vibration
- Isolated wiring compartment
- Integral safety straps
- Temperature compensation technology for longer life

Application

The SafeSite® LED Floodlight represents the future of energy efficient facility illumination for hazardous applications worldwide. The fixture consumes at least 50% less energy than traditional HID light sources, while reducing maintenance and improving light quality. This light incorporates both cutting edge LED technology along with proprietary optics to achieve flood lighting comparable with other traditional light sources.

SafeSite® LED Floodlight - UL 844

Standard Model & Slipfitter Model

Standard Models

Slipfitter Models

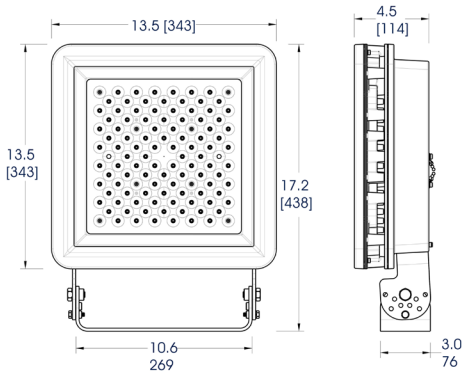

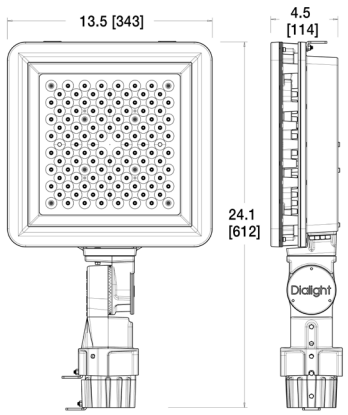

Dimensions in inches [mm]

Temperature Ratings	
Ambient Temperature Range T4A Temperature Code	Ambient Temperature Range T5 Temperature Code
15,000 - 13,500lm models	11,500 - 10,750lm models
-40°F to +149°F (-40°C to +65°C)	-40°F to +149°F (-40°C to +65°C)

Certifications & Ratings

- Class I, Div. 2 Groups A, B, C & D
- Class II, Div. 1 Groups E, F & G
- Class II, Div. 2 Groups F & G
- Class III
- UL 844
- CSA C22.2 No. 137
- NEMA 4X
- IP66/67
- IK07 (Glass) / IK10 (Polycarbonate)
- ABS # 14-HS1209391-PDA (Trunnion mount models only)

Mechanical Information:

Fixture weight:	30 lb (13.6 kg)
Shipping weight:	35 lb (15.9 kg)
EPA (Sq.ft):	1.66
Mounting:	- 304 Stainless Steel trunnion mount bracket (standard) - Integral slipfitter (optional for CID2 only)
Entries:	(2) 3/4" NPT cable entries (Trunnion mount models only)

Electrical Specifications:

Operating voltage:	100-277 VAC, 50/60Hz 347/480 VAC, 60Hz
Power consumption:	See table
Operating temp:	-40°F to +149°F (-40°C to +65°C)
Noise requirement /EMC:	EN 55015 - conducted and radiated FCC Title 47, Subpart B, Section 15, Class A device. RF Immunity; 10V/m, 80MHz-1GHz
Surge protection:	EN61000-4-5 Verified up to 6kV/2ohms at an independent test laboratory protection devices capable of 20kV
THD:	< 20%
Power factor:	> 0.9

Construction:

Housing:	Copper-free aluminum
Finish:	Superior dual coat finish - sealed polyester topcoat - chemical resistant epoxy primer
Lens:	Tempered glass Polycarbonate

Photometric Information:

CRI:	75
CCT:	5000K (cool white) 4000K (neutral white)
NEMA Patterns:	7x6 - Asymmetrical (140° x 115°) 6x7 - Asymmetrical (115° x 140°) 6 - Very wide (115°) 5 - Wide (93°) 4 - Medium (52°) 2 - Narrow (23°)
IES files:	Available at www.dialight.com

All values typical unless otherwise stated (tolerance +/- 10%)

WARNING - INSTALLATION & SECONDARY RETENTION. Use of any Dialight products without proper installation (including secondary retention / netting) and periodic inspections could cause severe injury or death. Dialight recommends that all installations should use secondary retention / netting (appropriate to the installation environment) where applicable. It is the exclusive responsibility of the contractor, installer and/or end-user to: (a) determine the suitability of the product for its intended application; and, (b) ensure that the product is safely installed (with secondary retention / netting where appropriate) and in compliance with all applicable laws and regulations. To the extent permissible under applicable laws, Dialight disclaims all liability for personal injury and/or other damage resulting from any dislodgment or other dislocation of its products.

SafeSite® LED Floodlight - UL 844

Mounting Accessories

HZXSAFECBLS

- Safety cable kit
- Kit includes: (2) Safety cables

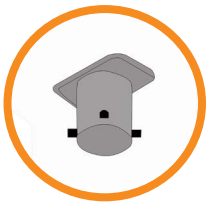

FLX-1TPT-20DB[1]

- Tenon pole topper, 2-3/8" mount (Trunnion mount models only)
- Kit includes: Tenon topper, pole set screws, and mounting hardware

FLX-1RAB-20DB

- Right angle mounting bracket for 2-3/8" light mount
- Kit includes: Right angle bracket

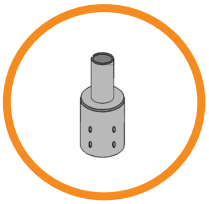

FLX-3RPA-20DB
FLX-4RPA-20DB

- Reducer for 3" or 4" OD round pole top to 2-3/8" light mount
- Kit includes: Reducer pole set screws

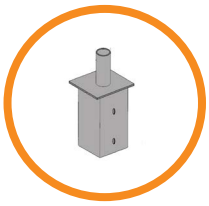

FLX-4SPA-20DB
FLX-5SPA-20DB
FLX-6SPA-20DB

- Internal tenon adapter for 4", 5" or 6" square pole top to 2-3/8" light mount
- Kit includes: Adapter

FLX-2LBH-20DB

- Bull horn for 2 lights, 2-3/8" mount, 21" spacing
- Kit includes: Bull horn, pole set screws

FLX-3LBH-20DB

- Bull horn for 3 lights, 2-3/8" mount, 21" spacing
- Kit includes: Bull horn, pole set screws

FLX-4LBH-20DB

- Bull horn for 4 lights, 2-3/8" mount, 21" spacing
- Kit includes: Bull horn, pole set screws

FLX-4RBH-20DB

- Bull horn for 4 lights, 2-3/8" mount, 21" spacing
- Kit includes: Bull horn, pole set screws

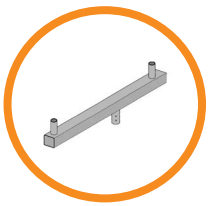

FLX-2RSR-20DB

- Bull horn for 2 lights, 2-3/8" mount, 21" spacing
- Kit includes: Bull horn, pole set screws

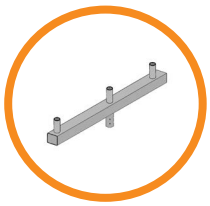

FLX-3RSR-20DB

- Bull horn for 3 lights, 2-3/8" mount, 21" spacing
- Kit includes: Bull horn, pole set screws

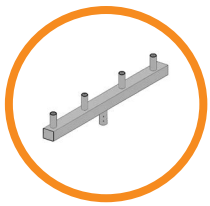

FLX-4RSR-20DB

- Bull horn for 4 lights, 2-3/8" mount, 21" spacing
- Kit includes: Bull horn, pole set screws

Brackets and adapters require the integral slipfitter models or tenon pole topper (FLX-1TPT-20DB) to mount floodlight. Tenon pole topper sold separately.

SafeSite® LED Floodlight - UL 844

Beam Distribution Patterns

NEMA 7x6 - Field angle = 140° x 115°

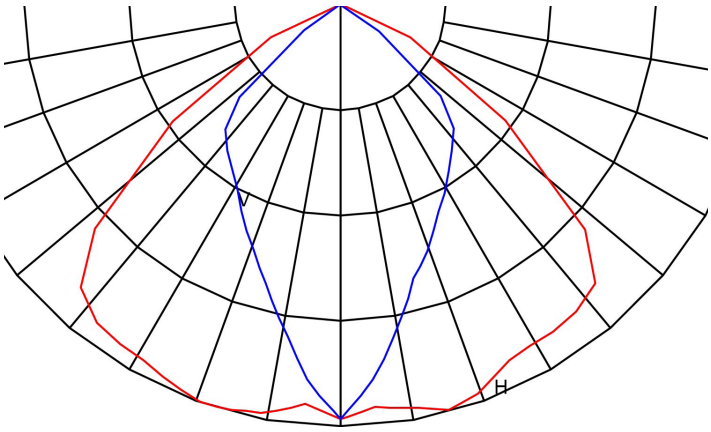

NEMA 6x7 - Field angle = 115° x 140°

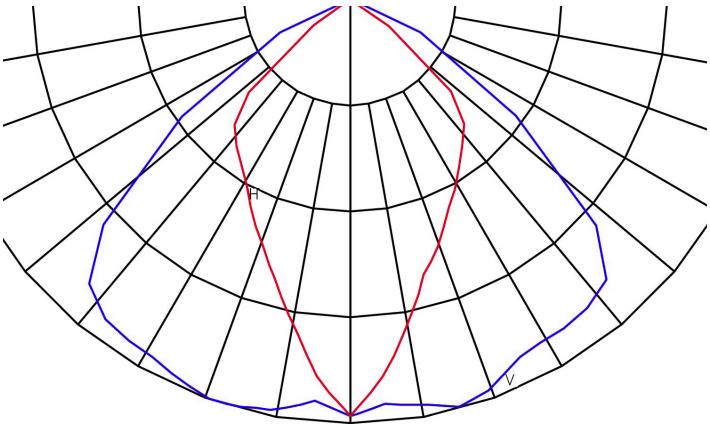

NEMA 6 - Field angle = 115°

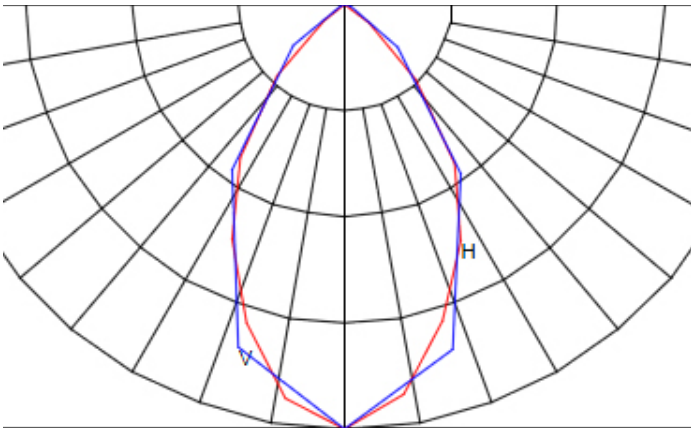

NEMA 5 - Field angle = 93°

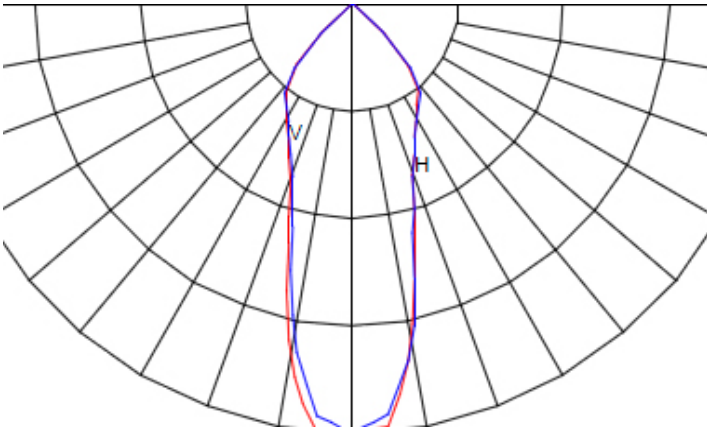

NEMA 4 - Field angle = 52°

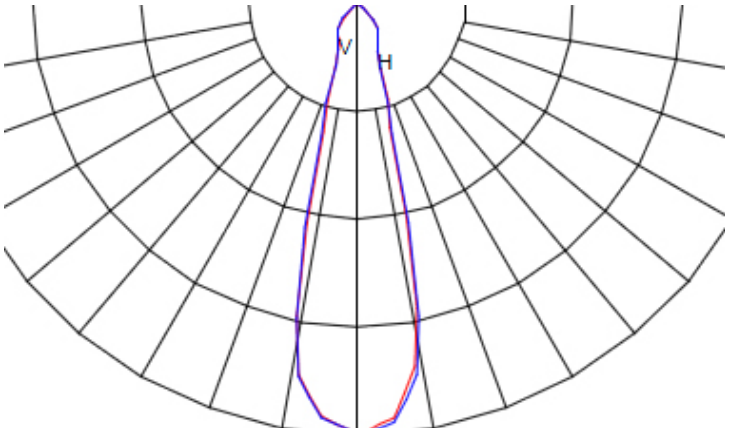

NEMA 2 - Field angle = 23°

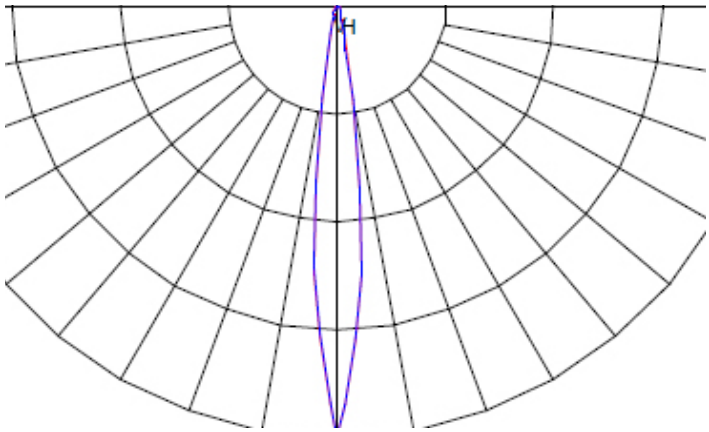

SafeSite® LED Floodlight - UL 844

Mounting Options

Standard Models

Factory Installed Mounting Bracket

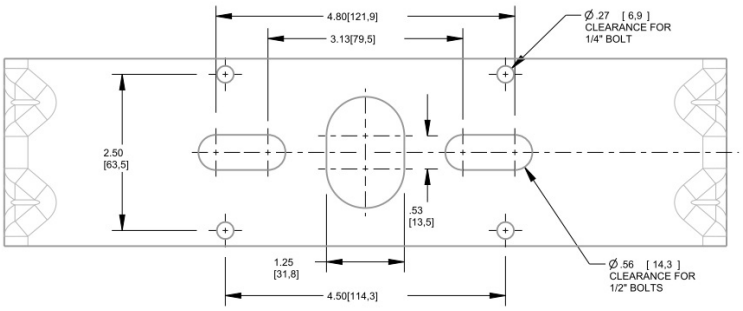

Bracket has locking positions at 0°, (±) 22.5°, (±) 45°, (±) 67.5°, and 90°

Slipfitter Models

0°, 45°, 90° Angles

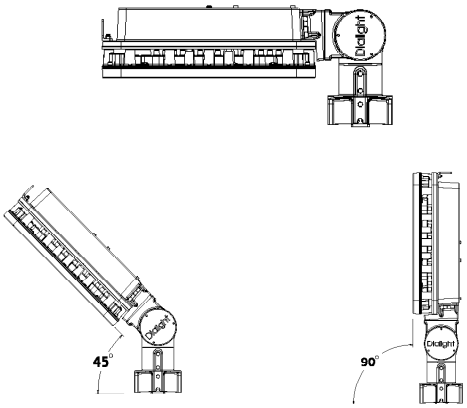

Mount to 2" round poles (2-3/8" OD)
Integrated Slipfitter has locking positions from 0°-180°, in 7.5° increments
Gasketed wiring compartment

SafeSite® LED Floodlight - UL 844

Mounting Options

FLX-1TPT-20DB

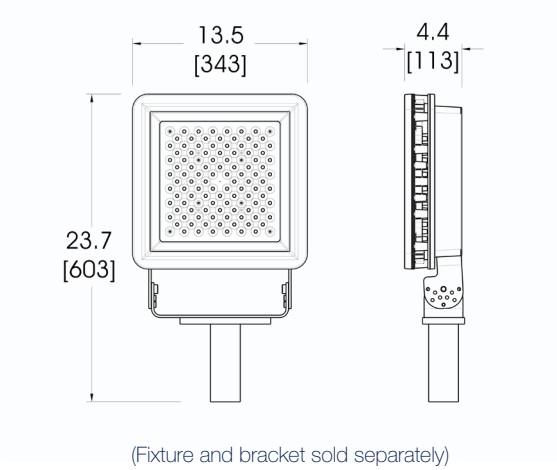

(Fixture and bracket sold separately)

FLX-1RAB-20DB

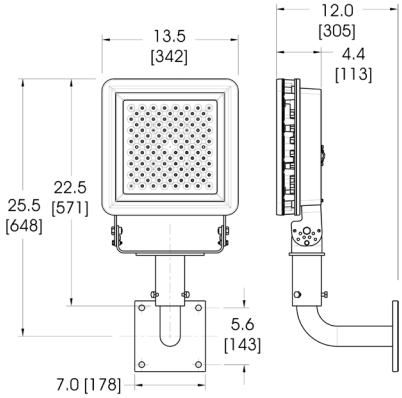

(Fixture and bracket sold separately)

FLX-2LBH-20DB

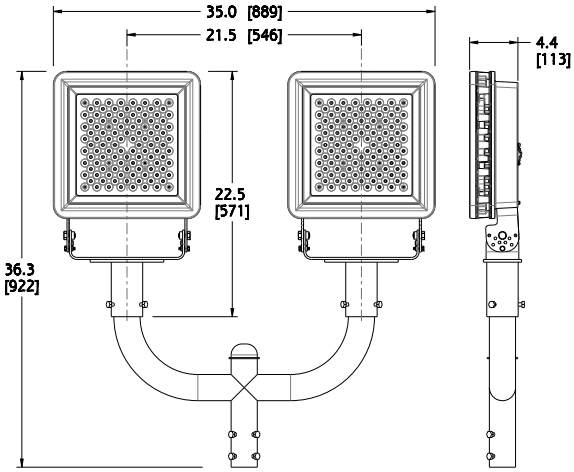

(Fixture and bracket sold separately)

SafeSite® LED Floodlight - UL 844

Ordering Information - Standard Model

Classifications: CID2 A, B, C, D • CIID1 E, F, G • CIID2 F, G • CIII

Legacy Part Number	New Part Number	CID2	CIID1	CIID2	CIII	Fixture Lumens	Wattage	lm/W	Voltage	Beam Distribution
100-277 VAC Models - Glass Lens, 5000K										
FLD466NC4NG	FLD76B2BNTNNGN	•	•	•	•	15,000	135	111	100-277 VAC	NEMA 6 (115°)
FLD476NC4NG	FLD77B2BNTNNGN	•	•	•	•	14,750	135	109	100-277 VAC	NEMA 7x6 (140° x 115°)
FLD467NC4NG	FLD78B2BNTNNGN	•	•	•	•	14,750	135	109	100-277 VAC	NEMA 6x7 (115° x 140°)
FLD455NC4NG	FLD75B2BNTNNGN	•	•	•	•	14,500	140	104	100-277 VAC	NEMA 5 (93°)
FLD444NC4NG	FLD74B2BNTNNGN	•	•	•	•	14,500	140	104	100-277 VAC	NEMA 4 (52°)
FLD422NC4NG	FLD72B2BNTNNGN	•	•	•	•	13,500	140	96	100-277 VAC	NEMA 2 (23°)
FLD276NC2NG	FLD77B2ANTNNGN	•	•	•	•	11,500	106	108	100-277 VAC	NEMA 7x6 (140° x 115°)
FLD267NC2NG	FLD78B2ANTNNGN	•	•	•	•	11,500	106	108	100-277 VAC	NEMA 6x7 (115° x 140°)
FLD266NC2NG	FLD76B2ANTNNGN	•	•	•	•	11,250	106	106	100-277 VAC	NEMA 6 (115°)
FLD255NC2NG	FLD75B2ANTNNGN	•	•	•	•	11,000	106	104	100-277 VAC	NEMA 5 (93°)
FLD244NC2NG	FLD74B2ANTNNGN	•	•	•	•	10,500	106	99	100-277 VAC	NEMA 4 (52°)
FLD222NC2NG	FLD72B2ANTNNGN	•	•	•	•	10,750	106	101	100-277 VAC	NEMA 2 (23°)
100-277 VAC Models - Polycarbonate Lens, 5000K										
FLD466NC4NP	FLD46B2BNTNNGN	•				14,000	135	104	100-277 VAC	NEMA 6 (115°)
FLD476NC4NP	FLD47B2BNTNNGN	•				13,750	135	102	100-277 VAC	NEMA 7x6 (140° x 115°)
FLD467NC4NP	FLD48B2BNTNNGN	•				13,750	135	102	100-277 VAC	NEMA 6x7 (115° x 140°)
FLD455NC4NP	FLD45B2BNTNNGN	•				13,500	140	96	100-277 VAC	NEMA 5 (93°)
FLD444NC4NP	FLD44B2BNTNNGN	•				13,500	140	96	100-277 VAC	NEMA 4 (52°)
FLD422NC4NP	FLD42B2BNTNNGN	•				12,500	140	89	100-277 VAC	NEMA 2 (23°)
FLD276NC2NP	FLD47B2ANTNNGN	•				10,500	106	99	100-277 VAC	NEMA 7x6 (140° x 115°)
FLD267NC2NP	FLD48B2ANTNNGN	•				10,500	106	99	100-277 VAC	NEMA 6x7 (115° x 140°)
FLD266NC2NP	FLD46B2ANTNNGN	•				10,250	106	97	100-277 VAC	NEMA 6 (115°)
FLD255NC2NP	FLD45B2ANTNNGN	•				10,000	106	94	100-277 VAC	NEMA 5 (93°)
FLD244NC2NP	FLD44B2ANTNNGN	•				9,500	106	90	100-277 VAC	NEMA 4 (52°)
FLD222NC2NP	FLD42B2ANTNNGN	•				9,750	106	92	100-277 VAC	NEMA 2 (23°)
347/480 VAC Models - Glass Lens Only, 5000K										
FLD466NC5NG	FLD76B5BNTNNGN	•	•	•	•	15,000	135	111	347/480 VAC	NEMA 6 (115°)
FLD476NC5NG	FLD77B5BNTNNGN	•	•	•	•	14,750	135	109	347/480 VAC	NEMA 7x6 (140° x 115°)
FLD467NC5NG	FLD78B5BNTNNGN	•	•	•	•	14,750	135	109	347/480 VAC	NEMA 6x7 (115° x 140°)
FLD455NC5NG	FLD75B5BNTNNGN	•	•	•	•	14,500	140	104	347/480 VAC	NEMA 5 (93°)
FLD444NC5NG	FLD74B5BNTNNGN	•	•	•	•	14,500	140	104	347/480 VAC	NEMA 4 (52°)
FLD422NC5NG	FLD72B5BNTNNGN	•	•	•	•	13,500	140	96	347/480 VAC	NEMA 2 (23°)
FLD276NC5NG	FLD77B5ANTNNGN	•	•	•	•	11,750	112	105	347/480 VAC	NEMA 7x6 (140° x 115°)
FLD267NC5NG	FLD78B5ANTNNGN	•	•	•	•	11,750	112	105	347/480 VAC	NEMA 6x7 (115° x 140°)
FLD266NC5NG	FLD76B5ANTNNGN	•	•	•	•	11,250	112	100	347/480 VAC	NEMA 6 (115°)
FLD255NC5NG	FLD75B5ANTNNGN	•	•	•	•	10,000	112	89	347/480 VAC	NEMA 5 (93°)
FLD244NC5NG	FLD74B5ANTNNGN	•	•	•	•	10,000	112	89	347/480 VAC	NEMA 4 (52°)
FLD222NC5NG	FLD72B5ANTNNGN	•	•	•	•	10,000	112	89	347/480 VAC	NEMA 2 (23°)

All values typical unless otherwise stated (tolerance +/- 10%).

Part numbers listed in the table above are powder coated gray. For trunnion mount models with bronze powder coat replace the 10th character with Z.

Part numbers listed in the table above are cool white. For neutral white models, replace the 8th character with an N.

SafeSite® LED Floodlight - UL 844

Ordering Information - Slipfitter Model

Classifications: CID2 A, B, C, D

Legacy Part Number	New Part Number	CID2	CIID1	CIID2	CIII	Fixture Lumens	Wattage	lm/W	Voltage	Beam Distribution
100-277 VAC Models - Glass Lens, 5000K										
FLD466SC4NG	FLD76B2BNSNNGN	•				15,000	135	111	100-277 VAC	NEMA 6 (115°)
FLD476SC4NG	FLD77B2BNSNNGN	•				14,750	135	109	100-277 VAC	NEMA 7x6 (140° x 115°)
FLD467SC4NG	FLD78B2BNSNNGN	•				14,750	135	109	100-277 VAC	NEMA 6x7 (115° x 140°)
FLD455SC4NG	FLD75B2BNSNNGN	•				14,500	140	104	100-277 VAC	NEMA 5 (93°)
FLD444SC4NG	FLD74B2BNSNNGN	•				14,500	140	104	100-277 VAC	NEMA 4 (52°)
FLD422SC4NG	FLD72B2BNSNNGN	•				13,500	140	96	100-277 VAC	NEMA 2 (23°)
FLD276SC2NG	FLD77B2ANSNNGN	•				11,500	106	108	100-277 VAC	NEMA 7x6 (140° x 115°)
FLD267SC2NG	FLD78B2ANSNNGN	•				11,500	106	108	100-277 VAC	NEMA 6x7 (115° x 140°)
FLD266SC2NG	FLD76B2ANSNNGN	•				11,250	106	106	100-277 VAC	NEMA 6 (115°)
FLD255SC2NG	FLD75B2ANSNNGN	•				11,000	106	104	100-277 VAC	NEMA 5 (93°)
FLD244SC2NG	FLD74B2ANSNNGN	•				10,500	106	99	100-277 VAC	NEMA 4 (52°)
FLD222SC2NG	FLD72B2ANSNNGN	•				10,750	106	101	100-277 VAC	NEMA 2 (23°)
100-277 VAC Models - Polycarbonate Lens, 5000K										
FLD466SC4NP	FLD46B2BNSNNGN	•				14,000	135	104	100-277 VAC	NEMA 6 (115°)
FLD476SC4NP	FLD47B2BNSNNGN	•				13,750	135	102	100-277 VAC	NEMA 7x6 (140° x 115°)
FLD467SC4NP	FLD48B2BNSNNGN	•				13,750	135	102	100-277 VAC	NEMA 6x7 (115° x 140°)
FLD455SC4NP	FLD45B2BNSNNGN	•				13,500	140	96	100-277 VAC	NEMA 5 (93°)
FLD444SC4NP	FLD44B2BNSNNGN	•				13,500	140	96	100-277 VAC	NEMA 4 (52°)
FLD422SC4NP	FLD42B2BNSNNGN	•				12,500	140	89	100-277 VAC	NEMA 2 (23°)
FLD276SC2NP	FLD47B2ANSNNGN	•				10,500	106	99	100-277 VAC	NEMA 7x6 (140° x 115°)
FLD267SC2NP	FLD48B2ANSNNGN	•				10,500	106	99	100-277 VAC	NEMA 6x7 (115° x 140°)
FLD266SC2NP	FLD46B2ANSNNGN	•				10,250	106	97	100-277 VAC	NEMA 6 (115°)
FLD255SC2NP	FLD45B2ANSNNGN	•				10,000	106	94	100-277 VAC	NEMA 5 (93°)
FLD244SC2NP	FLD44B2ANSNNGN	•				9,500	106	90	100-277 VAC	NEMA 4 (52°)
FLD222SC2NP	FLD42B2ANSNNGN	•				9,750	106	92	100-277 VAC	NEMA 2 (23°)
347/480 VAC Models - Glass Lens Only, 5000K										
FLD466SC5NG	FLD76B5BNSNNGN	•				15,000	135	111	347/480 VAC	NEMA 6 (115°)
FLD476SC5NG	FLD77B5BNSNNGN	•				14,750	135	109	347/480 VAC	NEMA 7x6 (140° x 115°)
FLD467SC5NG	FLD78B5BNSNNGN	•				14,750	135	109	347/480 VAC	NEMA 6x7 (115° x 140°)
FLD455SC5NG	FLD75B5BNSNNGN	•				14,500	140	104	347/480 VAC	NEMA 5 (93°)
FLD444SC5NG	FLD74B5BNSNNGN	•				14,500	140	104	347/480 VAC	NEMA 4 (52°)
FLD422SC5NG	FLD72B5BNSNNGN	•				13,500	140	96	347/480 VAC	NEMA 2 (23°)
FLD276SC5NG	FLD77B5ANSNNGN	•				11,750	112	105	347/480 VAC	NEMA 7x6 (140° x 115°)
FLD267SC5NG	FLD78B5ANSNNGN	•				11,750	112	105	347/480 VAC	NEMA 6x7 (115° x 140°)
FLD266SC5NG	FLD76B5ANSNNGN	•				11,250	112	100	347/480 VAC	NEMA 6 (115°)
FLD255SC5NG	FLD75B5ANSNNGN	•				10,000	112	89	347/480 VAC	NEMA 5 (93°)
FLD244SC5NG	FLD74B5ANSNNGN	•				10,000	112	89	347/480 VAC	NEMA 4 (52°)
FLD222SC5NG	FLD72B5ANSNNGN	•				10,000	112	89	347/480 VAC	NEMA 2 (23°)

All values typical unless otherwise stated (tolerance +/- 10%).

Part numbers listed in the table above are cool white. For neutral white models, replace the 8th character with an N.

North American HQ
1501 Route 34 South
Farmingdale, NJ 07727
Tel: 732-919-3119
Fax: 732-751-5778
info@dialight.com

EMEA Technical Centre
Ejby Industrivej 91 B
2600 Glostrup
Tel: +45 8877 4545 (Denmark)
Tel: +44 1638 666541 (UK)
Tel: +49 89 12089 5713 (Germany)
Tel: +33 3 23 22 62 58 (France)
sales-europe@dialight.com

Middle East
Level 42
Emirates Towers (Office Tower)
Sheikh Zayed Road
Dubai, United Arab Emirates
Fax: +971 (0) 4319 7686
Tel: +971 (0) 4319 7686

Australia
108 Howe Street
Osborne Park, WA 6017
Tel: +61 (0) 8 9244 7600
Fax: +61 (0) 8 9244 7601
info@dialight.com.au

Southeast Asia
33 Ubi Avenue 3
#07-72 Vertex (Tower A)
Singapore 408868
Tel: +65 6578 7157
Fax: +65 6578 7150
enquiry@dialight.com.sg

Brazil
Alameda Mercurio,
225 – American Park Empresarial NR
Indaiatuba – SP – 13347– 662
Tel: +55 (19) 3113-4300
Fax: +55 (19) 3113-4300
brasil@dialight.com