SafeSite® N-Series LED Linear for ATEX/IECEx

Important Information:

These instructions contain safety information, read and follow them carefully. Dialight will not accept any responsibility for injury, damage or loss which may occur due to incorrect installation, operation or maintenance.

Operating/Installation Instructions

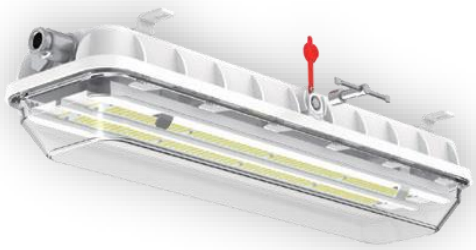

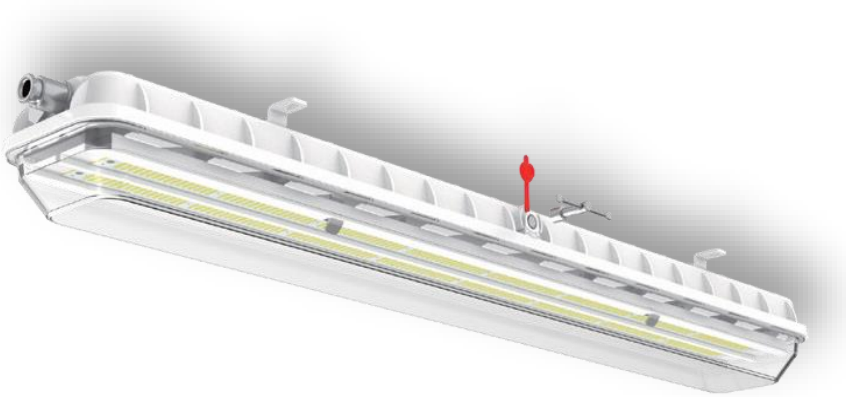

Revision 09252026

Dialight, 1501 Route 34 South, Farmingdale, NJ, USA 07727
Tel: 732 919 3119 Fax: 732 751 5778 www.dialight.com

***WARNING: INSTALLATION & SECONDARY RETENTION**. The use of this product without proper installation and inspections, including secondary safety retention/securing/netting, could cause severe injury or death. Dialight recommends that all installations should use secondary retention and/or safety netting (appropriate to the installation environment) where applicable. It is the exclusive responsibility of the contractor, installer and/or end customer to: (a) determine the suitability of the product for its intended application; and (b) ensure that the product is installed safely (with secondary retention and/or safety netting where appropriate) and in compliance with all applicable laws and regulations. To the extent permissible under the relevant law, Dialight disclaims all responsibility for personal injury and/or other damage resulting from any dislodgement or other dislocation of this product.*

***ADVERTENCIA: INSTALACIÓN Y SISTEMA SECUNDARIO DE SUJECIÓN**. Usar este producto sin haberlo instalado e inspeccionado correctamente, lo que incluye usar sistemas secundarios de retención/sujeción/redes, podría ocasionar lesiones graves o la muerte. Dialight recomienda que en todas las instalaciones se utilice un sistema secundario de retención o una red de seguridad (apropiados para el lugar de la instalación), según corresponda. Será responsabilidad exclusiva del contratista, el instalador o el cliente final encargarse de lo siguiente: a) determinar si el producto es apto para el uso previsto; y b) asegurarse de que el producto se instale de manera segura (usando un sistema secundario de retención o una red de seguridad, si corresponde) y de conformidad con todas las leyes y disposiciones aplicables. En la máxima medida autorizada por la legislación pertinente, Dialight no será responsable por ninguna lesión personal u otros daños que se produzcan a raíz de cualquier caída o desplazamiento de este producto.*

***AVISO: INSTALAÇÃO E RETENÇÃO SECUNDÁRIA**. O uso deste produto sem a instalação e inspeções adequadas, incluindo retenção/fixação secundárias e/ou redes de segurança, pode provocar ferimentos sérios ou morte. A Dialight recomenda que todas as instalações utilizem retenção secundária e/ou redes de segurança (apropriadas ao ambiente da instalação) sempre que aplicável. É responsabilidade exclusiva da empreiteira, instaladora e/ou do cliente final: (a) determinar a adequabilidade deste produto para a aplicação pretendida; e, (b) assegurar que o produto seja instalado de maneira segura (com retenção secundária e/ou rede de segurança sempre que apropriado) e em conformidade com todas as leis e regulamentações aplicáveis. Dentro dos limites permitidos pela legislação pertinente, a Dialight se exime de toda responsabilidade por ferimentos pessoais e/ou outros danos resultantes do desalojamento ou de outro deslocamento deste produto.*

***AVERTISSEMENT : INSTALLATION ET FIXATION SECONDAIRE**. L'utilisation de ce produit sans une installation et des inspections en bonne et due forme, notamment la sécurisation/ la fixation de sécurité secondaires/ l'installation d'une grille en acier tissée de sécurité, peut entraîner des blessures graves voire la mort. Dialight recommande que toutes les installations soient pourvues d'une fixation secondaire ou d'une grille en acier tissée de sécurité (adaptées à l'environnement de l'installation) dans la mesure du possible. Il va de la responsabilité exclusive de l'entrepreneur, de l'installateur ou du client final de : (a) déterminer si le produit est adapté à son usage prévu et (b) assurer que le produit est installé de manière sûre (avec une fixation secondaire et/ou une grille en acier tissée de sécurité le cas échéant) et en conformité avec la loi et les normes en vigueur. Dans la mesure permise par la loi en vigueur, Dialight n'assumera aucune responsabilité en cas de blessure sur la personne ou autre dommage résultant du déboîtement ou de toute autre dislocation de ce produit.*

***WARNUNG: INSTALLATION UND ZWEITE ABHÄNGUNG**. Die Verwendung dieses Produkts ohne ordnungsgemäße Installation und Inspektionen, einschließlich einer zweiten Abhängung/eines Sicherheitsnetzes, könnte zu schweren Verletzungen oder Tod führen. Dialight empfiehlt bei allen Installationen die Verwendung einer zweiten Abhängung und/oder eines Sicherheitsnetzes (entsprechend der Installationsumgebung). Es ist die ausschließliche Verantwortlichkeit des Vertragsnehmers, Monteurs und/oder Endkunden: (a) die Eignung des Produkts für seinen vorgesehenen Nutzungszweck zu bestimmen und (b) sicherzustellen, dass das Produkt sicher (mit ggf. zweiter Abhängung und/oder einem Sicherheitsnetz) und gemäß allen geltenden Gesetzen und Vorschriften montiert wird. Soweit gemäß dem geltenden Gesetz erlaubt, schließt Dialight jegliche Haftung für Körperverletzung und/oder andere Schäden aufgrund einer Entfernung oder anderen Positionsänderung dieses Produkts aus.*

Dialight, 1501 Route 34 South, Farmingdale, NJ, USA 07727
Tel: 732 919 3119 Fax: 732 751 5778 www.dialight.com

WARNING:

DO NOT OPEN WHEN ENERGIZED.

DO NOT OPEN WHEN AN EXPLOSIVE ATMOSPHERE IS PRESENT.

POTENTIAL ELECTROSTATIC CHARGING HAZARD – SEE INSTRUCTIONS

Category of Application:			
N*A*******	Ex db eb mb IIC T6...T5 Gb Ex tb IIIC T80°C...T95°C Db or Ex eb mb IIC T6...T5 Gb Ex tb IIIC T80°C...T95°C Db **IECEx TPS 26.0033X**		II 2 G Ex db eb mb IIC T6...T5 Gb II 2 D Ex tb IIIC T80°C...T95°C Db or II 2 D Ex eb mb IIC T6...T5 Gb II 2 D Ex tb IIIC T80°C...T95°C Db **TPS 26 ATEX 138104 0001 X Rev. 00**
Rated Input Voltage:			
N**2****	100–277VAC 50/60Hz		
Rated Input Current:			
N2*****N**	0.30A at 100VAC, 0.132A at 240VAC		
N4*****N**	0.50A at 100VAC, 0.219A at 240VAC		
N2*****F**	0.350A at 100VAC, 0.154A at 240VAC		
N4*****F**	0.55A at 100VAC, 0.241A at 240VAC		
Inrush Current @240VAC:			
N2********	13.7A (8ms)		
N4********	12.9A (8ms)		
Housing:	Fibre Reinforced Plastic		
Lens:	Fibreglass Reinforced Polycarbonate		
Ingress Protection: IP66			
Impact Rating: IK10 (Lens and Body)			
Cable Entries:	4 x M20 x 1.5		
Dimensions:	N2 – 711x215x206mm		
	N4 - 1321x215x206mm		
Product Net Weight:			
N2*****N**	6.4 kg		
N4*****N**	9.4 kg		
N2*****F**	7.9 kg		
N4*****F**	10.9 kg		

Revision 09252026
Dialight, 1501 Route 34 South, Farmingdale, NJ, USA 07727
Tel: 732 919 3119 Fax: 732 751 5778 www.dialight.com

Product Model Details:

Model	Maximum rated power	Voltage	Certified LED Driver model	Ambient Temp. Rating	Temp Class (Gas/Dust)
N2A******N	30W	100-277VAC	DR-30W-db*	-40°C to +70°C	T5 /T95°C
N4A******N	50W	100-277VAC	DR-50W-db-*	-40°C to +60°C	T5 /T95°C
N2A******F	35W	100-277VAC	DR-35W-db*	-10°C to +45°C -10°C to +60°C	T6 /T80°C T5 /T95°C
N4A******F	55W	100-277VAC	DR-55W-db-*	-10°C to +45°C -10°C to +60°C	T6 /T80°C T5 /T95°C

Special Conditions of use:

1. The equipment shall not be installed in areas where external environmental conditions may cause electrostatic charge accumulation on its surfaces. In addition, the equipment shall only be wiped with a damp cloth.

2. The cable shall be selected and installed by the end user. The cable's temperature rating shall be at least 105°C when used in ambient temperatures exceeding 70°C.

3. Use only replaceable battery pack “18650-2000mAh” or “KRH26/51(C)3000T”. (NZX-BATT-KIT)

4. Clean the luminaire regularly to prevent dust accumulation.

5. The user shall provide additional clamping of the cable to ensure that pulling is not transmitted to the terminations.

This product complies with following standards：

IEC	EN
IEC 60079-0: 2017	EN IEC 60079-0:2018
IEC 60079-1: 2014	EN 60079-1:2014
IEC 60079-7: 2017	EN 60079-7:2015+A1:2018
IEC 60079-18: 2017	EN 60079-18:2015+A1:2017
IEC 60079-31: 2013	EN IEC 60079-31:2024

Revision 09252026
Dialight, 1501 Route 34 South, Farmingdale, NJ, USA 07727
Tel: 732 919 3119 Fax: 732 751 5778 www.dialight.com

The **Dialight SafeSite® N-Series LED Linear** is a hazardous-area LED luminaire intended for use in **Zone 1 and Zone 2 gas atmospheres** and **Zone 21 and Zone 22 dust atmospheres**, for indoor or outdoor use.

Installation, inspection, maintenance, and repair shall be carried out only by properly trained and authorized personnel familiar with hazardous area equipment and the requirements of IEC/EN 60079-14, IEC/EN 60079-17, and any applicable local regulations.

Before Installing

Before use, ensure basic technical data listed on nameplate conforms to actual

environment.

Do not install/operate if product is damaged in any way.

Installation and Electrical Connections

Ensure the supply is isolated before installation or maintenance. Install the equipment in accordance with these instructions and all applicable electrical and hazardous area regulations.

Use cable glands and stopping plugs suitable for the site conditions and certified for the application. Cable entry components shall maintain the protection level of the luminaire. Cable entries: 4 x M20 x 1.5

This equipment is intended for installation in potentially explosive atmospheres and shall be installed in accordance with the applicable local and national electrical codes and the requirements of IEC/EN 60079-14 and other relevant hazardous area standards.

This equipment is designed for fixed installation only. It shall not be used if damaged or installed outside its certified configuration.

Internal and external bonding cables, including single-conductor or multiple strand conductor, should have steel cable lugs installed, then connected to the grounding connector. Tighten the screw and make sure screw torque is not less than 2 N·m.

External bonding location:

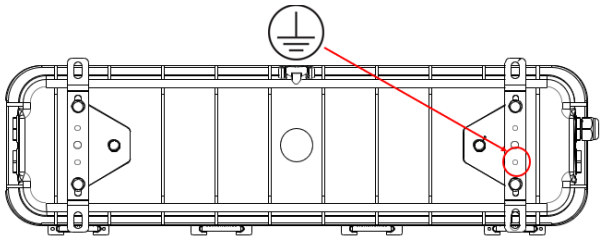

Revision 09252026
Dialight, 1501 Route 34 South, Farmingdale, NJ, USA 07727
Tel: 732 919 3119 Fax: 732 751 5778 www.dialight.com

1. Unpack luminaire and access tool

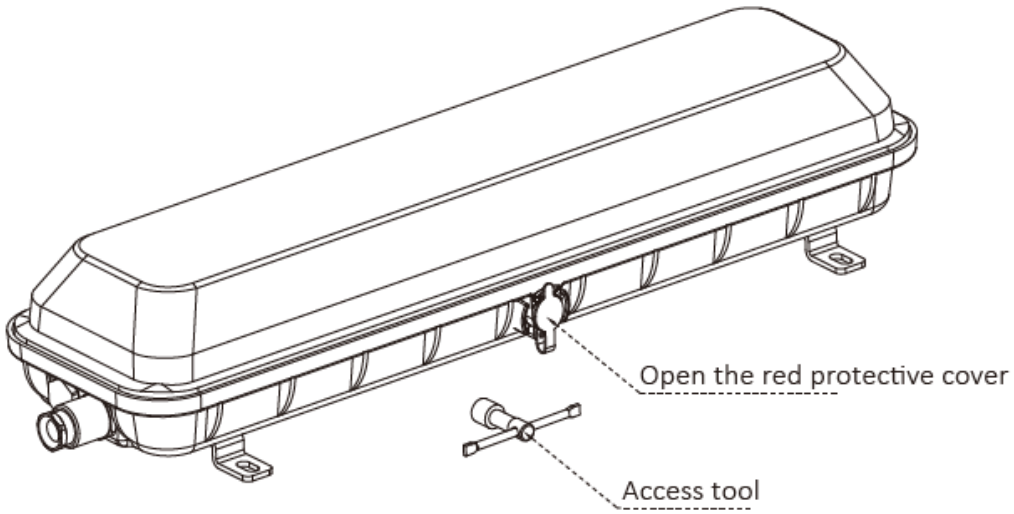

Do not install if product is damaged

2. Surface Mounting

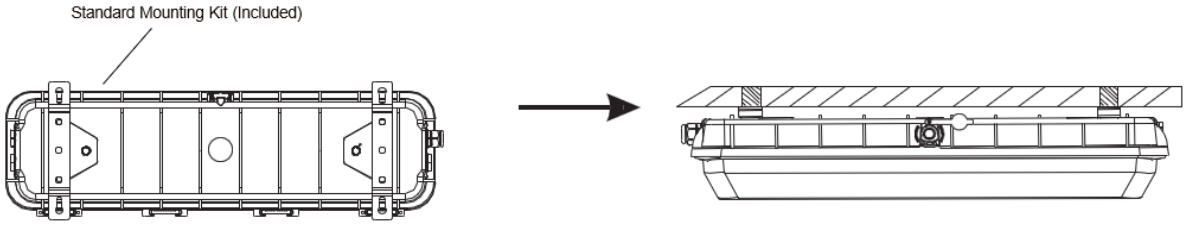

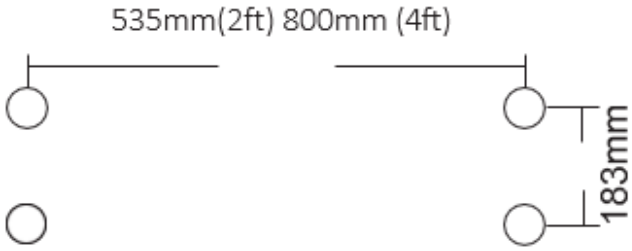

Drill hole centres as per above dimensions and install suitable expanding screws. (535mm for 2ft, 800mm for 4ft).

Revision 09252026
Dialight, 1501 Route 34 South, Farmingdale, NJ, USA 07727
Tel: 732 919 3119 Fax: 732 751 5778 www.dialight.com

2A. Pole Mounting

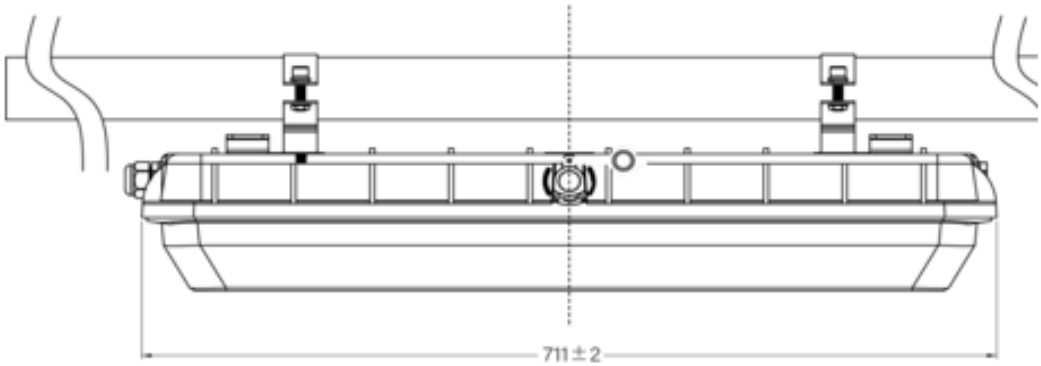

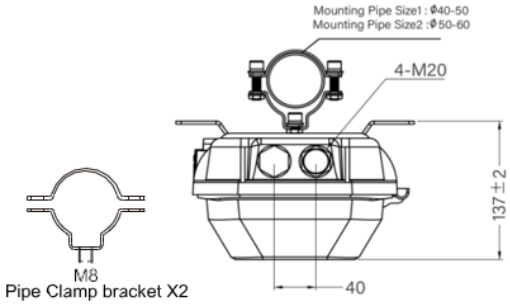

Attach pipe clamps (sold separately) to the luminaire using M8 screws provided. Clamps can then slide over pole and tightened in position.

Clamp torque: 21Nm

3. Once mounted, insert access tool as shown to open luminaire

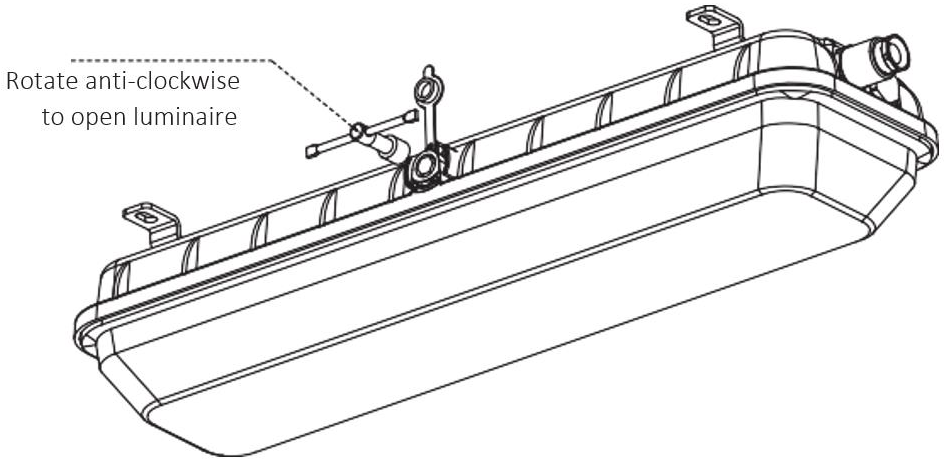

Revision 09252026
Dialight, 1501 Route 34 South, Farmingdale, NJ, USA 07727
Tel: 732 919 3119 Fax: 732 751 5778 www.dialight.com

4. Access wiring area

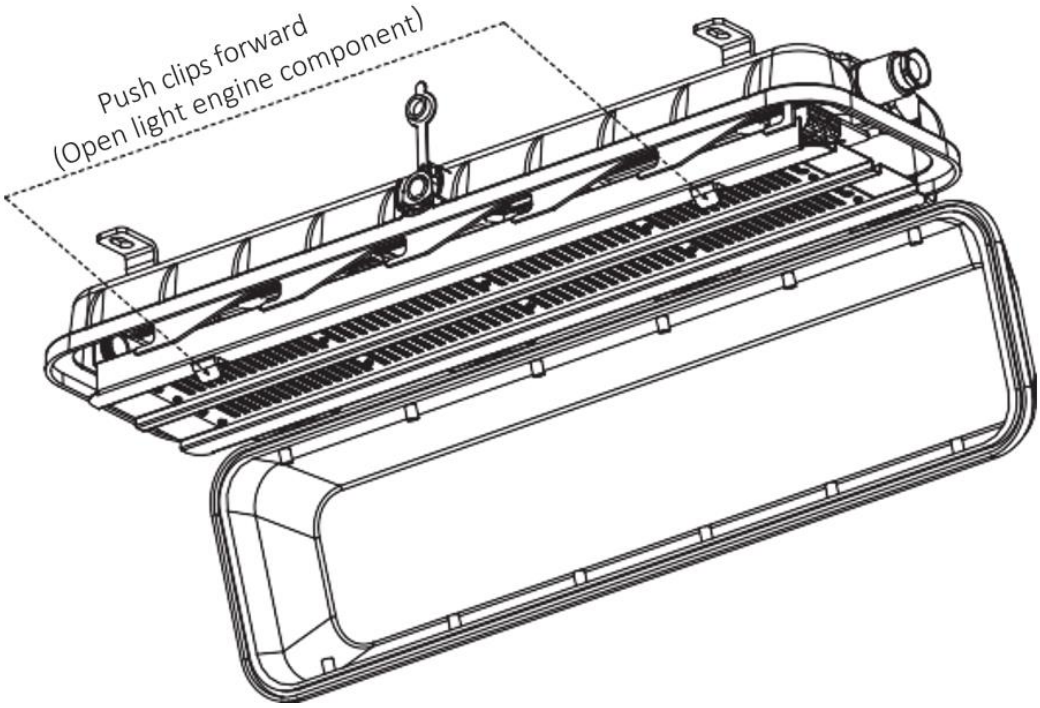

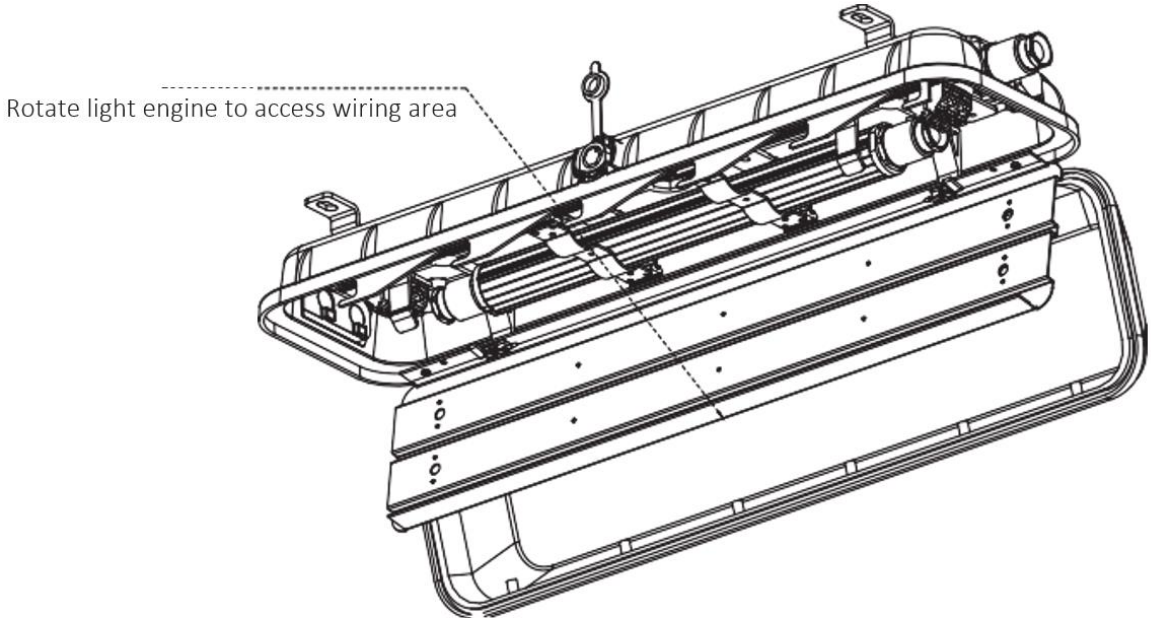

Dialight, 1501 Route 34 South, Farmingdale, NJ, USA 07727
Tel: 732 919 3119 Fax: 732 751 5778 www.dialight.com

5. Make electrical connections:

When LED luminaires are installed in explosive gas atmosphere, cable glands and blanking plugs must comply with IEC 60079-0, IEC 60079-31 and IEC 60079-7 with protection type Ex mb be II C Gb and IP66 (ingress protection) shall be adopted. Do not over-tighten cable glands or entry hardware. Follow the gland manufacturer's torque recommendations.
The terminal block shall be used only within its approved conductor size range. Conductors shall be stripped to the correct length, inserted fully, and terminated so that insulation extends as close as possible to the terminal without conductor damage.
Only one conductor shall be used in each terminal entry point unless the final approved terminal specification explicitly allows otherwise.
Supply Connections – WAGO 862-1604
Strip length - 10 ... 11 mm / 0.39 ... 0.43 inches
Link to terminal block information
All incoming power cables shall be a minimum is 18AWG, and external bonding wire section should not less than 4 mm^2. The cable's temperature rating shall be at least 105°C

Through-Wiring
This luminaire supports loop-in and loop-out installation and through-wiring.
Where through-wiring is used, connect both the incoming supply cable and outgoing cable to the designated terminal position within the single terminal block located at one end of the luminaire. The through-wire cable must be fixed to the luminaire body to prevent movement or strain on the terminals. This is done by way of cable ties (supplied).

N2 Models - Position for installing cable ties to secure the cable

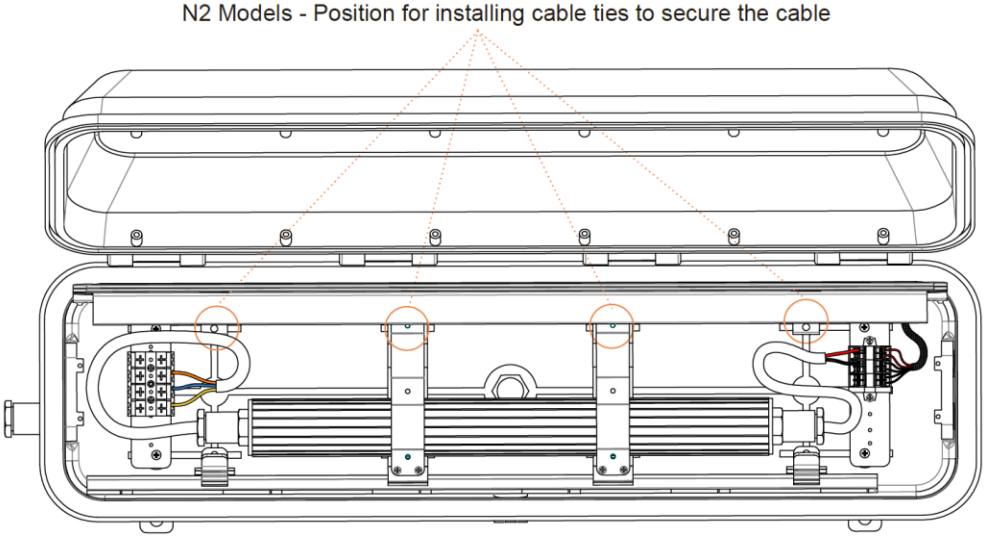

Revision 09252026
Dialight, 1501 Route 34 South, Farmingdale, NJ, USA 07727
Tel: 732 919 3119 Fax: 732 751 5778 www.dialight.com

N4 Models - Position for installing cable ties to secure the cable

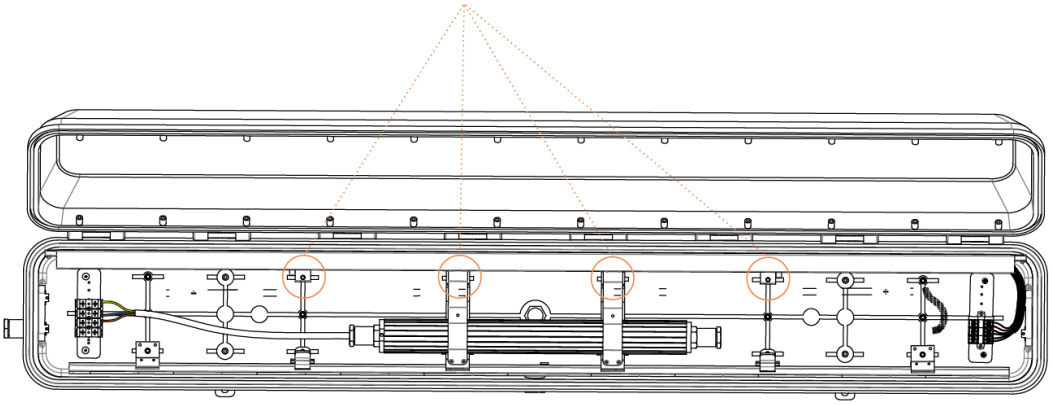

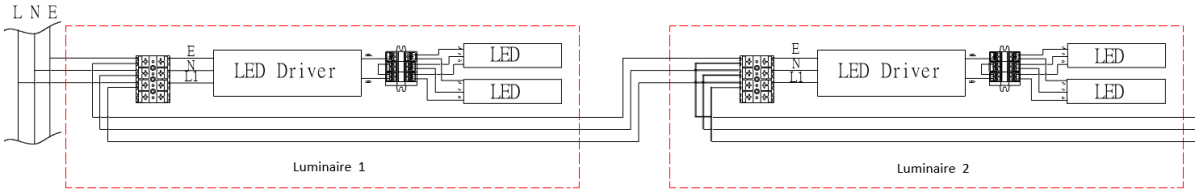

Standard Models

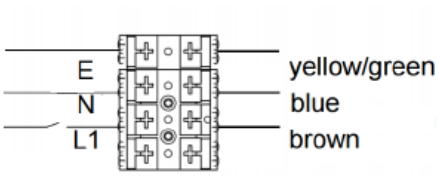

Battery Backup Models

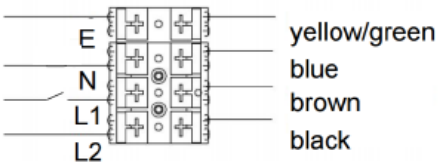

E	Earth
N	Neutral
L1	Switched Live
L2	Permanent Active

Revision 09252026
Dialight, 1501 Route 34 South, Farmingdale, NJ, USA 07727
Tel: 732 919 3119 Fax: 732 751 5778 www.dialight.com

6. Replace light engine and secure with clips
7. Use access tool to close luminaire 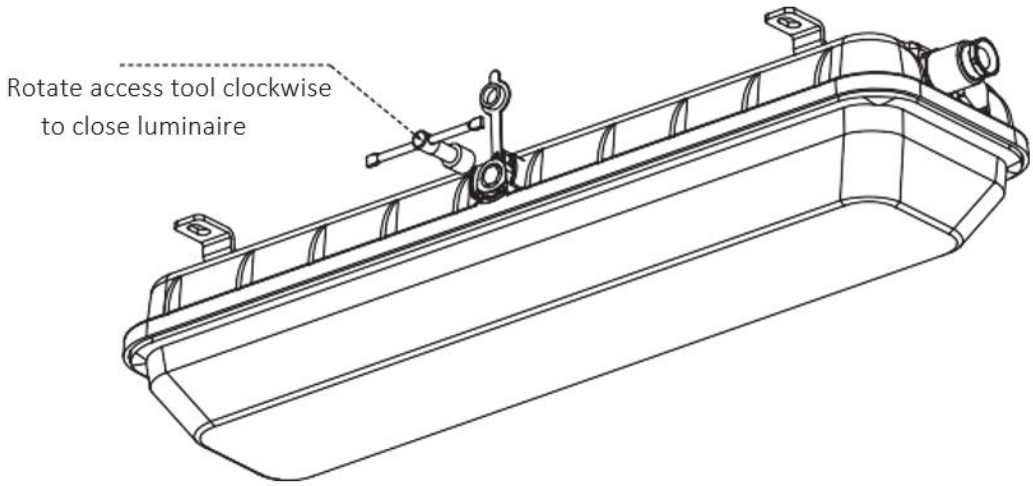   Ensure wires are not pinched when closing. Replace red protective cover

Battery Backup Models

Battery backup models shall be installed and commissioned in accordance with the approved electrical design and product-specific emergency circuit arrangement.

Before commissioning: confirm all battery and indicator connections are properly made. Mark the battery installation date and verify correct charging and status indication after energization. Initial charging time is 24 hours. The battery shall be replaced when it no longer supports the rated emergency duration after testing. Replacement parts shall be approved for the certified product only.

Automatic Testing:

The emergency power supply is equipped with an intelligent control module. It conducts regular automatic tests, including a 30-second discharge test every month and a complete battery discharge test annually. During this period, the emergency power supply simulates a power outage situation and automatically switches to the emergency mode. Additionally, during routine inspections, the working status and functions of the emergency power supply are regularly monitored. If any abnormal faults are detected, the red indicator light will flash rapidly showing there is an abnormal phenomenon with the emergency power supply.

Revision 09252026
Dialight, 1501 Route 34 South, Farmingdale, NJ, USA 07727
Tel: 732 919 3119 Fax: 732 751 5778 www.dialight.com

Automatic testing			
The emergency power supply is equipped with an intelligent control module. It conducts regular automatic tests, including a 30-second discharge test every month and a complete battery discharge test annually. During this period, the emergency power supply simulates a power outage situation and automatically switches to the emergency mode. Additionally, during routine inspections, the working status and functions of the emergency power supply are regularly monitored. If any abnormal faults are detected, the indicator light will flash rapidly to alert you that there is an abnormal phenomenon with the emergency power supply and that it needs to be inspected and repaired.			
Work indicator light status	**Slow flash = 0.5Hz**	**Fast flash=20Hz**	**RED LED Indicator**
Mode	Indicator LED status	Conclusion & Status	
AC Mode（1）	Red on	Normal drive output & battery charging	
Emergency Mode（1）	2 seconds on, 2 seconds off (Red Slow flash)	Entered emergency mode until the battery is fully discharged. Exit emergency mode after the battery has fully discharged.	
Malfunction	When the indicator is on for 0.05 seconds and then off for 0.05 seconds (Fast Flash), it indicates that there is a fault with the power supply. Please contact the manufacturer.		

WARNING

Before energizing the luminaire, verify that:

- Verify that voltage and wiring configuration are correct before energizing the luminaire
- The luminaire is undamaged
- All mechanical fasteners are secure
- All cable entries are properly installed and sealed
- All unused entries are closed with certified stopping plugs
- Internal wiring is correct
- The enclosure is fully closed
- All certification requirements for the installation are met

Taking Into Operation

SafeSite N-Series light fixtures have battery backup and non-battery backup models. When equipped with the battery backup function, battery charging occurs when permanent active is on; when there is a loss of power, the battery backup function will engage. Light fixtures will continue to illuminate at a reduced light output. Battery backup duration is 3 hrs.

Revision 09252026
Dialight, 1501 Route 34 South, Farmingdale, NJ, USA 07727
Tel: 732 919 3119 Fax: 732 751 5778 www.dialight.com

Maintenance and Inspection

Do not open the luminaire when an explosive atmosphere may be present.

Inspection frequency shall be determined by the site conditions and applicable national regulations.

In case of harsh operating conditions, regular maintenance is required, including; checking for smooth operation of the luminaire access system and removing any dirt accumulation and inspection of lens and lens supports for cracks.

Any alterations or modifications to the device are not permitted. Alteration or modification will void any warranty/liability on the manufacturer.

Routine inspection should include:

- Checking for damage to enclosure, lens, seals, and cable entries
- Checking mounting security
- Checking for corrosion, contamination, or water ingress
- Cleaning external surfaces and removing dust accumulation
- Checking that certification-related hardware remains intact
- Repairs shall only be carried out using approved parts and approved procedures.

Disposal

National waste disposal regulations must be observed

Transport and Storage

Transport and store the luminaire in its original packaging in a clean, dry location. Inspect the product on receipt and before installation. Do not install if the enclosure, lens, seals, threads, or mounting features show signs of damage.

Dialight, 1501 Route 34 South, Farmingdale, NJ, USA 07727
Tel: 732 919 3119 Fax: 732 751 5778 www.dialight.com