Dialight

ProSite LED Floodlight

Technical Specification Sheet - APAC

SEPTEMBER 2026

ProSite LED Floodlight - Non-Hazardous

F1 Models

Certifications & Ratings

- 10 year warranty
- CE / ENEC / RCM
- IP66/67
- DNV TAE00004GM
- IK10 - Integrated PC optic only
- IK08 - Glass lens
- L70 > 150,000 hours @ 25°C ambient
- Vibration - Lloyd's test 1

Angled Bracket

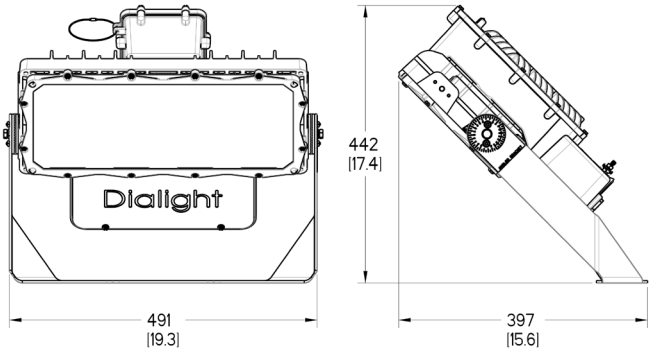

Dimensions in mm [inches]
Additional dimensional drawings on pages 16-17

Mechanical Information:

Fixture weight:	10.9 - 13.6 kg
Shipping weight:	~14.5 kg
EPA (m²):	0.186
Mounting: (all with 7.5° tilt adjustment)	316 stainless steel straight bracket 316 stainless steel angled bracket Slipfitter bracket
Cable entry:	2 x M25

Electrical Specifications:

Operating voltage:	120-277 VAC / 120-250 VDC 347-415-480 VAC
Operating temp:	-40°C to +65°C
EMC:	CISPR 15 Flicker: IEC 61000-3-3 Immunity requirements for lighting: IEC 61547 Harmonics: IEC 61000-3-2 Class C
Transient protection: Optional:	IEC 61000-4-5. 6kV line-line and line-ground. Additional surge protection module rated for 10kA, 20kA single strike
THD:	< 20%
Power Factor:	> 0.9
Dimming:	DALI 2.0 compatible/0-10 VDC

Construction:

Housing:	A360 Die-cast aluminum
Hardware:	316 stainless steel
Finish:	Superior epoxy and polyester dual coat finish
Lens:	Integrated PC Optic/Lens, Glass Lens Cover

Photometric Information:

CRI:	70
CCT:	5000K (cool white) 4000K (neutral white) 2200K (warm white) 2700K (warm white) - 80 CRI Amber
Beam pattern:	Medium - 55° Wide - 125° Asymmetric - Forward Distribution
IES files:	Available at www.dialight.com

All values typical unless otherwise stated (tolerance +/- 10%)

WARNING - INSTALLATION & SECONDARY RETENTION. Use of any Dialight products without proper installation (including secondary retention / netting) and periodic inspections could cause severe injury or death. Dialight recommends that all installations should use secondary retention / netting (appropriate to the installation environment) where applicable. It is the exclusive responsibility of the contractor, installer and/or end-user to: (a) determine the suitability of the product for its intended application; and, (b) ensure that the product is safely installed (with secondary retention / netting where appropriate) and in compliance with all applicable laws and regulations. To the extent permissible under applicable laws, Dialight disclaims all liability for personal injury and/or other damage resulting from any dislodgment or other dislocation of its products.

Ordering Information - F1

ProSite LED Floodlight - Non-Hazardous

Industrial - CE / RCM							
Part Number	Fixture Lumens	Wattage	lm/W	Voltage	CCT	Lens	Beam Distribution
12,000lm Models							
F1E-N6B2-BDEN-VGN	13,200	81	163	100-277VAC / 120-250VDC	5000k (cool white)	Integrated PC	Wide (125°)
F1E-N4B2-BDEN-VGN	13,200	81	163	100-277VAC / 120-250VDC	5000k (cool white)	Integrated PC	Medium (56°)
F1E-7FB2-BDEN-VGN	12,200	81	151	100-277VAC / 120-250VDC	5000k (cool white)	Glass	Asymmetric
F1E-N6L2-BDEN-VGN	13,200	81	163	100-277VAC / 120-250VDC	4000k (neutral white)	Integrated PC	Wide (125°)
F1E-N4L2-BDEN-VGN	13,200	81	163	100-277VAC / 120-250VDC	4000k (neutral white)	Integrated PC	Medium (56°)
F1E-7FL2-BDEN-VGN	12,200	81	151	100-277VAC / 120-250VDC	4000k (neutral white)	Glass	Asymmetric
F1E-N6W2-BDEN-VGN	10,200	81	126	100-277VAC / 120-250VDC	2700k (warm white)	Integrated PC	Wide (125°)
F1E-N4W2-BDEN-VGN	10,200	81	126	100-277VAC / 120-250VDC	2700k (warm white)	Integrated PC	Medium (56°)
F1E-7FW2-BDEN-VGN	8,600	81	106	100-277VAC / 120-250VDC	2700k (warm white)	Glass	Asymmetric
18,000lm Models							
F1E-N6B2-CDEN-VGN	19,100	124	154	100-277VAC / 120-250VDC	5000k (cool white)	Integrated PC	Wide (125°)
F1E-N4B2-CDEN-VGN	19,100	124	154	100-277VAC / 120-250VDC	5000k (cool white)	Integrated PC	Medium (56°)
F1E-7FB2-CDEN-VGN	16,700	124	135	100-277VAC / 120-250VDC	5000k (cool white)	Glass	Asymmetric
F1E-N6L2-CDEN-VGN	19,100	124	154	100-277VAC / 120-250VDC	4000k (neutral white)	Integrated PC	Wide (125°)
F1E-N4L2-CDEN-VGN	19,100	124	154	100-277VAC / 120-250VDC	4000k (neutral white)	Integrated PC	Medium (56°)
F1E-7FL2-CDEN-VGN	16,700	124	135	100-277VAC / 120-250VDC	4000k (neutral white)	Glass	Asymmetric
F1E-N6W2-CDEN-VGN	14,800	124	119	100-277VAC / 120-250VDC	2700k (warm white)	Integrated PC	Wide (125°)
F1E-N4W2-CDEN-VGN	14,800	124	119	100-277VAC / 120-250VDC	2700k (warm white)	Integrated PC	Medium (56°)
F1E-7FW2-CDEN-VGN	12,400	124	100	100-277VAC / 120-250VDC	2700k (warm white)	Glass	Asymmetric
30,000lm Models							
F1E-N6B2-FDEN-VGN	31,600	234	135	100-277VAC / 120-250VDC	5000k (cool white)	Integrated PC	Wide (125°)
F1E-N4B2-FDEN-VGN	31,600	234	135	100-277VAC / 120-250VDC	5000k (cool white)	Integrated PC	Medium (56°)
F1E-7FB2-FDEN-VGN	27,700	234	118	100-277VAC / 120-250VDC	5000k (cool white)	Glass	Asymmetric
F1E-N6L2-FDEN-VGN	31,600	234	135	100-277VAC / 120-250VDC	4000k (neutral white)	Integrated PC	Wide (125°)
F1E-N4L2-FDEN-VGN	31,600	234	135	100-277VAC / 120-250VDC	4000k (neutral white)	Integrated PC	Medium (56°)
F1E-7FL2-FDEN-VGN	27,700	234	118	100-277VAC / 120-250VDC	4000k (neutral white)	Glass	Asymmetric
F1E-N6W2-FDEN-VGN	24,500	234	105	100-277VAC / 120-250VDC	2700k (warm white)	Integrated PC	Wide (125°)
F1E-N4W2-FDEN-VGN	24,500	234	105	100-277VAC / 120-250VDC	2700k (warm white)	Integrated PC	Medium (56°)
F1E-7FW2-FDEN-VGN	20,500	234	88	100-277VAC / 120-250VDC	2700k (warm white)	Glass	Asymmetric
Amber Models							
F1E-7FA2-BDEN-VGN	11,600	226	51	100-277VAC / 120-250VDC	Amber	Glass	Asymmetric

All values typical unless otherwise stated (tolerance +/-10%)
Part numbers listed in bold are typically available in stock.
Voltage - For 347-415-480 VAC change the 7th character to '5'.
CCT - Change 6th character to 'U' for 2200k.
Lens - For glass lens change 4th character to a '7'.
Surge Protection - For 10kA surge protection 120-277 VAC change 7th character to '8'. For 10kA surge protection 347-415-480 VAC change 7th character to '9'.
PE Cell - For 3-Pin NEMA PE Cell Receptacle with shorting cap change 9th character to 'S'.
Mounting Bracket - Angled Bracket supplied as standard - for straight bracket change 10th character to 'F', for slip fitter change 10th character to 'S', for heavy-duty bracket change 10th character to "H".

DISCLAIMER. All product information provided is, to the best of Dialight's knowledge, accurate as of the date of publication. When ordering, refer to *www.dialight.com* for current versions of: (a) relevant product documentation (including the relevant product data sheets); (b) Dialight terms and conditions of sale; and, (c) the relevant product warranty. To the extent that any contract is deemed formed between Dialight and the purchaser of Dialight products and/or an end-user, versions of documents available at *www.dialight.com* as at the date of sale shall be the versions incorporated therein. In the event of any discrepancy between this document or information provided at *www.dialight.com*, the latter shall prevail.

ProSite LED Floodlight - Non-Hazardous

F2 Models

Certifications & Ratings

- 10 year warranty
- CE / ENEC / RCM
- IP66/67
- DNV TAE00004GM
- IK10 - Integrated PC optic only
- IK08 - Glass lens
- L70 > 150,000 hours @ 25°C ambient
- Vibration - Lloyd's test 1

Angled Bracket

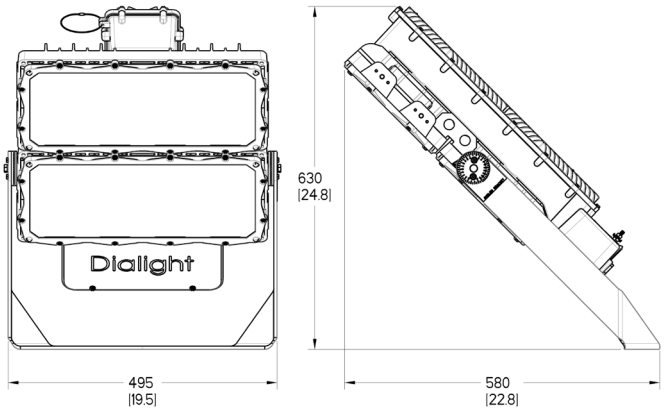

Dimensions in mm [inches]
Additional dimensional drawings on pages 16-17

Mechanical Information:

Fixture weight:	19.5 - 24.5 kg
Shipping weight:	~25.5 kg
EPA (m^2):	0.310
Mounting: (all with 7.5° tilt adjustment)	316 stainless steel straight bracket 316 stainless steel angled bracket
Cable entry:	2 x M25

Electrical Specifications:

Operating voltage:	120-277 VAC / 120-250 VDC 347-415-480 VAC
Operating temp:	-40°C to +65°C -40°C to +55°C - 60klm
EMC:	CISPR 15 Flicker: IEC 61000-3-3 Immunity requirements for lighting: IEC 61547 Harmonics: IEC 61000-3-2 Class C
Transient protection: Optional:	IEC 61000-4-5. 6kV line-line and line-ground. Additional surge protection module rated for 10kA, 20kA single strike
THD:	< 20%
Power Factor:	> 0.9
Dimming:	DALI 2.0 compatible/0-10 VDC

Construction:

Housing:	A360 Die-cast aluminum
Hardware:	316 stainless steel
Finish:	Superior epoxy and polyester dual coat finish
Lens:	Integrated PC Optic/Lens, Glass Lens Cover

Photometric Information:

CRI:	70
CCT:	5000K (cool white) 4000K (neutral white) 2200K (warm white) 2700K (warm white) - 80 CRI Amber
Beam pattern:	Medium - 55° Wide - 125° Asymmetric - Forward Distribution
IES files:	Available at www.dialight.com

All values typical unless otherwise stated (tolerance +/- 10%)

WARNING - INSTALLATION & SECONDARY RETENTION. Use of any Dialight products without proper installation (including secondary retention / netting) and periodic inspections could cause severe injury or death. Dialight recommends that all installations should use secondary retention / netting (appropriate to the installation environment) where applicable. It is the exclusive responsibility of the contractor, installer and/or end-user to: (a) determine the suitability of the product for its intended application; and, (b) ensure that the product is safely installed (with secondary retention / netting where appropriate) and in compliance with all applicable laws and regulations. To the extent permissible under applicable laws, Dialight disclaims all liability for personal injury and/or other damage resulting from any dislodgment or other dislocation of its products.

Ordering Information - F2

ProSite LED Floodlight - Non-Hazardous

Industrial - CE / RCM							
Part Number	Fixture Lumens	Wattage	lm/W	Voltage	CCT	Lens	Beam Distribution
60,000lm Models - 10kA Surge Protection							
F2E-N6B8-NDEN-VGN	65,000	484	134	120-277VAC / 120-250VDC	5000k (cool white)	Integrated PC	Wide (125°)
F2E-N4B8-NDEN-VGN	65,000	484	134	120-277VAC / 120-250VDC	5000k (cool white)	Integrated PC	Medium (56°)
F2E-7FB8-NDEN-VGN	60,100	484	124	120-277VAC / 120-250VDC	5000k (cool white)	Glass	Asymmetric
F2E-N6L8-NDEN-VGN	65,000	484	134	120-277VAC / 120-250VDC	4000k (neutral white)	Integrated PC	Wide (125°)
F2E-N4L8-NDEN-VGN	65,000	484	134	120-277VAC / 120-250VDC	4000k (neutral white)	Integrated PC	Medium (56°)
F2E-7FL8-NDEN-VGN	60,100	484	124	120-277VAC / 120-250VDC	4000k (neutral white)	Glass	Asymmetric
F2E-N6L8-NDEN-VGN	50,400	484	104	120-277VAC / 120-250VDC	2700k (warm white)	Integrated PC	Wide (125°)
F2E-N4L8-NDEN-VGN	50,400	484	104	120-277VAC / 120-250VDC	2700k (warm white)	Integrated PC	Medium (56°)
F2E-7FL8-NDEN-VGN	42,300	484	87	120-277VAC / 120-250VDC	2700k (warm white)	Glass	Asymmetric
Amber Models							
F2E-7FA2-EDEN-VGN	20,500	461	44	120-277VAC / 120-250VDC	Amber	Glass	Asymmetric
60,000lm Models - 347-415-480 VAC 10kA Surge Protection							
F2E-N6B9-NDEN-VGN	65,000	499	130	347-415-480VAC	5000k (cool white)	Integrated PC	Wide (125°)
F2E-N4B9-NDEN-VGN	65,000	499	130	347-415-480VAC	5000k (cool white)	Integrated PC	Medium (56°)
F2E-7FB9-NDEN-VGN	60,100	499	120	347-415-480VAC	5000k (cool white)	Glass	Asymmetric
F2E-N6L9-NDEN-VGN	65,000	499	130	347-415-480VAC	4000k (neutral white)	Integrated PC	Wide (125°)
F2E-N4L9-NDEN-VGN	65,000	499	130	347-415-480VAC	4000k (neutral white)	Integrated PC	Medium (56°)
F2E-7FL9-NDEN-VGN	60,100	499	120	347-415-480VAC	4000k (neutral white)	Glass	Asymmetric
F2E-N6L8-NDEN-VGN	50,400	499	101	347-415-480VAC	2700k (warm white)	Integrated PC	Wide (125°)
F2E-N4L8-NDEN-VGN	50,400	499	101	347-415-480VAC	2700k (warm white)	Integrated PC	Medium (56°)
F2E-7FL8-NDEN-VGN	42,300	499	85	347-415-480VAC	2700k (warm white)	Glass	Asymmetric

All values typical unless otherwise stated (tolerance +/- 10%).
Part numbers listed in bold are typically available in stock.
CCT - Change 6th character to 'U' for 2200k.
Lens - For glass lens change 4th character to a '7'
PE Cell - For 3-Pin NEMA PE Cell Receptacle with shorting cap change 9th character to 'S'.
Mounting Bracket - Angled Bracket supplied as standard - for straight bracket change 10th character to 'F'- for heavy-duty bracket change 10th character to "H".

DISCLAIMER. All product information provided is, to the best of Dialight's knowledge, accurate as of the date of publication. When ordering, refer to *www.dialight.com* for current versions of: (a) relevant product documentation (including the relevant product data sheets); (b) Dialight terms and conditions of sale; and, (c) the relevant product warranty. To the extent that any contract is deemed formed between Dialight and the purchaser of Dialight products and/or an end-user, versions of documents available at *www.dialight.com* as at the date of sale shall be the versions incorporated therein. In the event of any discrepancy between this document or information provided at *www.dialight.com*, the latter shall prevail.

ProSite LED Floodlight - Hazardous

F1 Models

Certifications & Ratings

- 10 year warranty
- ATEX/IECEx Zone 2, 21 & 22
  - Ex ec IIC T4 Gc
  - Ex tb IIIC T110°C Db
  - ITS-I 22 ATEX 29411X
  - ITS-I 22 ATEX 294111X
  - IECEx ETL 22.0001X
- IP66/67
- DNV TAE00004GM
- IK08 - Glass lens
- L70 > 150,000 hours @ 25°C ambient
- Vibration - Lloyd's test 1

Angled Bracket

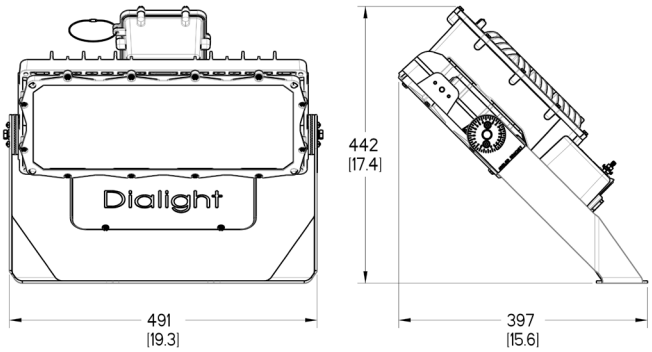

Dimensions in mm [inches]
Additional dimensional drawings on pages 16-17

Mechanical Information:

Fixture weight:	10.9 - 13.6 kg
Shipping weight:	~14.5 kg
EPA (m^2):	0.186
Mounting: (all with 7.5° tilt adjustment)	316 stainless steel straight bracket 316 stainless steel angled bracket Slipfitter bracket
Cable entry:	2 x M25

Electrical Specifications:

Operating voltage:	120-277 VAC / 120-250 VDC 347-415-480 VAC
Operating temp:	-40°C to +65°C
EMC:	CISPR 15 Flicker: IEC 61000-3-3 Immunity requirements for lighting: IEC 61547 Harmonics: IEC 61000-3-2 Class C
Transient protection:	IEC 61000-4-5. 6kV line-line and line-ground.
THD:	< 20%
Power Factor:	> 0.9
Dimming:	DALI 2.0 compatible/0-10 VDC

Construction:

Housing:	A360 Die-cast aluminum
Hardware:	316 stainless steel
Finish:	Superior epoxy and polyester dual coat finish
Lens:	Glass

Photometric Information:

CRI:	70
CCT:	5000K (cool white) 4000K (neutral white) 2200K (warm white) 2700K (warm white) - 80 CRI Amber
Beam pattern:	Medium - 55° Wide - 125° Asymmetric - Forward Distribution
IES files:	Available at www.dialight.com

All values typical unless otherwise stated (tolerance +/- 10%)

WARNING - INSTALLATION & SECONDARY RETENTION. Use of any Dialight products without proper installation (including secondary retention / netting) and periodic inspections could cause severe injury or death. Dialight recommends that all installations should use secondary retention / netting (appropriate to the installation environment) where applicable. It is the exclusive responsibility of the contractor, installer and/or end-user to: (a) determine the suitability of the product for its intended application; and, (b) ensure that the product is safely installed (with secondary retention / netting where appropriate) and in compliance with all applicable laws and regulations. To the extent permissible under applicable laws, Dialight disclaims all liability for personal injury and/or other damage resulting from any dislodgment or other dislocation of its products.

Ordering Information - F1

ProSite LED Floodlight - Hazardous

Hazardous - ATEX/IECEx Zone 2, 21, 22							
Part Number	Fixture Lumens	Wattage	lm/W	Voltage	CCT	Lens	Beam Distribution
12,000lm Models							
F1B-76B2-BDEN-VGN	12,500	81	154	100-277VAC / 120-250VDC	5000k (cool white)	Glass	Wide (125°)
F1B-74B2-BDEN-VGN	12,500	81	154	100-277VAC / 120-250VDC	5000k (cool white)	Glass	Medium (56°)
F1B-7FB2-BDEN-VGN	12,200	81	151	100-277VAC / 120-250VDC	5000k (cool white)	Glass	Asymmetric
F1B-76L2-BDEN-VGN	12,500	81	154	100-277VAC / 120-250VDC	4000k (neutral white)	Glass	Wide (125°)
F1B-74L2-BDEN-VGN	12,500	81	154	100-277VAC / 120-250VDC	4000k (neutral white)	Glass	Medium (56°)
F1B-7FL2-BDEN-VGN	12,200	81	151	100-277VAC / 120-250VDC	4000k (neutral white)	Glass	Asymmetric
F1B-76W2-BDEN-VGN	9,500	81	117	100-277VAC / 120-250VDC	2700k (warm white)	Glass	Wide (125°)
F1B-74W2-BDEN-VGN	9,500	81	117	100-277VAC / 120-250VDC	2700k (warm white)	Glass	Medium (56°)
F1B-7FW2-BDEN-VGN	8,600	81	106	100-277VAC / 120-250VDC	2700k (warm white)	Glass	Asymmetric
18,000lm Models							
F1B-76B2-CDEN-VGN	18,000	124	145	100-277VAC / 120-250VDC	5000k (cool white)	Glass	Wide (125°)
F1B-74B2-CDEN-VGN	18,000	124	145	100-277VAC / 120-250VDC	5000k (cool white)	Glass	Medium (56°)
F1B-7FB2-CDEN-VGN	16,400	124	132	100-277VAC / 120-250VDC	5000k (cool white)	Glass	Asymmetric
F1B-76L2-CDEN-VGN	18,000	124	145	100-277VAC / 120-250VDC	4000k (neutral white)	Glass	Wide (125°)
F1B-74L2-CDEN-VGN	18,000	124	145	100-277VAC / 120-250VDC	4000k (neutral white)	Glass	Medium (56°)
F1B-7FL2-CDEN-VGN	16,400	124	132	100-277VAC / 120-250VDC	4000k (neutral white)	Glass	Asymmetric
F1B-76W2-CDEN-VGN	13,800	124	111	100-277VAC / 120-250VDC	2700k (warm white)	Glass	Wide (125°)
F1B-74W2-CDEN-VGN	13,800	124	111	100-277VAC / 120-250VDC	2700k (warm white)	Glass	Medium (56°)
F1B-7FW2-CDEN-VGN	12,400	124	100	100-277VAC / 120-250VDC	2700k (warm white)	Glass	Asymmetric
30,000lm Models							
F1B-76B2-FDEN-VGN	29,900	234	128	100-277VAC / 120-250VDC	5000k (cool white)	Glass	Wide (125°)
F1B-74B2-FDEN-VGN	29,900	234	128	100-277VAC / 120-250VDC	5000k (cool white)	Glass	Medium (56°)
F1B-7FB2-FDEN-VGN	27,700	234	118	100-277VAC / 120-250VDC	5000k (cool white)	Glass	Asymmetric
F1B-76L2-FDEN-VGN	29,900	234	128	100-277VAC / 120-250VDC	4000k (neutral white)	Glass	Wide (125°)
F1B-74L2-FDEN-VGN	29,900	234	128	100-277VAC / 120-250VDC	4000k (neutral white)	Glass	Medium (56°)
F1B-7FL2-FDEN-VGN	27,700	234	118	100-277VAC / 120-250VDC	4000k (neutral white)	Glass	Asymmetric
F1B-76W2-FDEN-VGN	22,800	234	97	100-277VAC / 120-250VDC	2700k (warm white)	Glass	Wide (125°)
F1B-74W2-FDEN-VGN	22,800	234	97	100-277VAC / 120-250VDC	2700k (warm white)	Glass	Medium (56°)
F1B-7FW2-FDEN-VGN	20,500	234	88	100-277VAC / 120-250VDC	2700k (warm white)	Glass	Asymmetric
Amber Models							
F1B-7FA2-BDEN-VGN	11,600	226	51	100-277VAC / 120-250VDC	Amber	Glass	Asymmetric

All values typical unless otherwise stated (tolerance +/- 10%).
Part numbers listed in **bold** are typically available in stock.
CCT - Change 6th character to 'U' for 2200k.
Mounting Bracket - Angled Bracket supplied as standard - for straight bracket change 10th character to 'F'- for heavy-duty bracket change 10th character to "H".

DISCLAIMER. All product information provided is, to the best of Dialight's knowledge, accurate as of the date of publication. When ordering, refer to *www.dialight.com* for current versions of: (a) relevant product documentation (including the relevant product data sheets); (b) Dialight terms and conditions of sale; and, (c) the relevant product warranty. To the extent that any contract is deemed formed between Dialight and the purchaser of Dialight products and/or an end-user, versions of documents available at *www.dialight.com* as at the date of sale shall be the versions incorporated therein. In the event of any discrepancy between this document or information provided at *www.dialight.com*, the latter shall prevail.

ProSite LED Floodlight - Hazardous

F2 Models

Certifications & Ratings

- 10 year warranty
- ATEX/IECEx Zone 2, 21 & 22
  - Ex ec IIC T4 Gc
  - Ex tb IIIC T110°C Db
  - ITS-I 22 ATEX 29411X
  - ITS-I 22 ATEX 294111X
  - IECEx ETL 22.0001X
- IP66/67
- DNV TAE00004GM
- IK08 - Glass lens
- L70 > 150,000 hours @ 25°C ambient
- Vibration - Lloyd's test 1

Angled Bracket

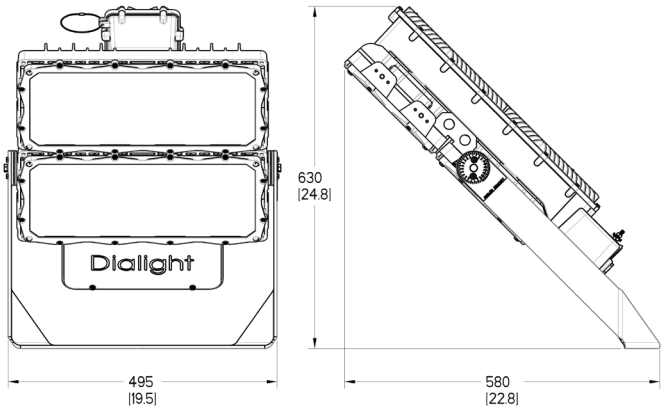

Dimensions in mm [inches]
Additional dimensional drawings on pages 16-17

Mechanical Information:

Fixture weight:	19.5 - 24.5 kg
Shipping weight:	~25.5 kg
EPA (m^2):	0.310
Mounting: (all with 7.5° tilt adjustment)	316 stainless steel straight bracket 316 stainless steel angled bracket
Cable entry:	2 x M25

Electrical Specifications:

Operating voltage:	120-277 VAC / 120-250 VDC 347-415-480 VAC
Operating temp:	-40°C to +65°C -40°C to +55°C - 60klm
EMC:	CISPR 15 Flicker: IEC 61000-3-3 Immunity requirements for lighting: IEC 61547 Harmonics: IEC 61000-3-2 Class C
Transient protection:	IEC 61000-4-5. 6kV line-line and line-ground.
THD:	< 20%
Power Factor:	> 0.9
Dimming:	DALI 2.0 compatible/0-10 VDC

Construction:

Housing:	A360 Die-cast aluminum
Hardware:	316 stainless steel
Finish:	Superior epoxy and polyester dual coat finish
Lens:	Glass

Photometric Information:

CRI:	70
CCT:	5000K (cool white) 4000K (neutral white) 2200K (warm white) 2700K (warm white) - 80 CRI Amber
Beam pattern:	Medium - 55° Wide - 125° Asymmetric - Forward Distribution
IES files:	Available at www.dialight.com

All values typical unless otherwise stated (tolerance +/- 10%)

WARNING - INSTALLATION & SECONDARY RETENTION. Use of any Dialight products without proper installation (including secondary retention / netting) and periodic inspections could cause severe injury or death. Dialight recommends that all installations should use secondary retention / netting (appropriate to the installation environment) where applicable. It is the exclusive responsibility of the contractor, installer and/or end-user to: (a) determine the suitability of the product for its intended application; and, (b) ensure that the product is safely installed (with secondary retention / netting where appropriate) and in compliance with all applicable laws and regulations. To the extent permissible under applicable laws, Dialight disclaims all liability for personal injury and/or other damage resulting from any dislodgment or other dislocation of its products.

Ordering Information - F2

ProSite LED Floodlight - Hazardous

Hazardous - ATEX/IECEx Zone 2, 21, 22							
Part Number	Fixture Lumens	Wattage	lm/W	Voltage	CCT	Lens	Beam Distribution
60,000lm Models							
F2B-77B2-NDEN-VGN	61,400	484	127	120-277VAC / 120-250VDC	5000k (cool white)	Glass	Very Wide (131° x 108°)
F2B-76B2-NDEN-VGN	61,400	484	127	120-277VAC / 120-250VDC	5000k (cool white)	Glass	Wide (125°)
F2B-74B2-NDEN-VGN	61,400	484	127	120-277VAC / 120-250VDC	5000k (cool white)	Glass	Medium (56°)
F2B-7FB2-NDEN-VGN	60,100	484	124	120-277VAC / 120-250VDC	5000k (cool white)	Glass	Asymmetric
F2B-77L2-NDEN-VGN	61,400	484	127	120-277VAC / 120-250VDC	4000k (neutral white)	Glass	Very Wide (131° x 108°)
F2B-76L2-NDEN-VGN	61,400	484	127	120-277VAC / 120-250VDC	4000k (neutral white)	Glass	Wide (125°)
F2B-74L2-NDEN-VGN	61,400	484	127	120-277VAC / 120-250VDC	4000k (neutral white)	Glass	Wide (56°)
F2B-7FL2-NDEN-VGN	60,100	484	124	120-277VAC / 120-250VDC	4000k (neutral white)	Glass	Asymmetric
Amber Models							
F2B-7FA2-EDEN-VGN	20,500	461	44	120-277VAC / 120-250VDC	Amber	Glass	Asymmetric

All values typical unless otherwise stated (tolerance +/- 10%).
Part numbers listed in bold are typically available in stock.
CCT - For 2700k change 6th character to 'W'. For 2200k change 6th character to 'U'. Refer to lumen table on page 10 for accurate values.
Mounting Bracket - Angled Bracket supplied as standard - for straight bracket change 10th character to 'F'.

DISCLAIMER. All product information provided is, to the best of Dialight's knowledge, accurate as of the date of publication. When ordering, refer to *www.dialight.com* for current versions of: (a) relevant product documentation (including the relevant product data sheets); (b) Dialight terms and conditions of sale; and, (c) the relevant product warranty. To the extent that any contract is deemed formed between Dialight and the purchaser of Dialight products and/or an end-user, versions of documents available at *www.dialight.com* as at the date of sale shall be the versions incorporated therein. In the event of any discrepancy between this document or information provided at *www.dialight.com*, the latter shall prevail.

Lumen Tables

Lumen Output Family	Wattage (120-277 VAC)	Wattage (347-480 VAC)	Optic	PC Optic Only				Glass Lens			
				5000K	4000K	2700K	2200K	5000K	4000K	2700K	2200K
12,000	81	84	Medium (NEMA 4)	13,200	13,200	10,200	10,400	12,500	12,500	9,500	9,700
			Wide (NEMA 6)	13,200	13,200	10,200	10,400	12,500	12,500	9,500	9,700
			Asymmetric	-	-	-	-	11,600	11,600	8,600	8,800
18,000	124	128	Medium (NEMA 4)	19,100	19,100	14,800	15,100	18,000	18,000	13,800	14,000
			Wide (NEMA 6)	19,100	19,100	14,800	15,100	18,000	18,000	13,800	14,000
			Asymmetric	-	-	-	-	16,700	16,700	12,400	12,700
24,000	175	179	Medium (NEMA 4)	25,000	25,000	19,400	19,800	23,600	23,600	18,000	18,400
			Wide (NEMA 6)	25,000	25,000	19,400	19,800	23,600	23,600	18,000	18,400
			Asymmetric	-	-	-	-	21,900	21,900	16,300	16,600
F1 30,000	234	237	Medium (NEMA 4)	31,600	31,600	24,500	25,000	29,900	29,900	22,800	23,200
			Wide (NEMA 6)	31,600	31,600	24,500	25,000	29,900	29,900	22,800	23,200
			Asymmetric	-	-	-	-	27,700	27,700	20,500	21,000
36,000	234	241	Medium (NEMA 4)	37,500	37,500	29,100	29,600	35,400	35,400	27,000	27,600
			Wide (NEMA 6)	37,500	37,500	29,100	29,600	35,400	35,400	27,000	27,600
			Asymmetric	-	-	-	-	32,800	32,800	24,400	24,900
48,000	346	357	Medium (NEMA 4)	51,000	51,000	39,500	40,300	48,200	48,200	36,700	37,500
			Wide (NEMA 6)	51,000	51,000	39,500	40,300	48,200	48,200	36,700	37,500
			Asymmetric	-	-	-	-	44,600	44,600	33,200	33,900
60,000	484	499	Medium (NEMA 4)	65,000	65,000	50,400	51,400	61,400	61,400	46,800	47,800
			Wide (NEMA 6)	65,000	65,000	50,400	51,400	61,400	61,400	46,800	47,800
			Asymmetric	-	-	-	-	56,900	56,900	42,300	43,200

Lumen Family	Wattage (120-277 VAC)	Wattage (347-480 VAC)	Optic	PC Optic Only	Glass Lens
				Amber	Amber
F1 12,000	226	230	Medium (NEMA 4)	13,000	12,300
			Wide (NEMA 6)	13,000	12,300
			Asymmetric	-	11,600
F2 24,000	461	485	Medium (NEMA 4)	23,000	21,700
			Wide (NEMA 6)	23,000	21,700
			Asymmetric	-	20,500

Inrush Current

F1 Models					
VAC	**120**	**240**	**347**	**415**	**480**
Peak inrush current (A)	7.7	15.4	4.1	4.9	5.7
Duration, T50 (ms)	1.5	1.5	1.5	1.5	1.5
F2 Models (36klm)					
Peak inrush current (A)	7.7	15.4	4.1	4.9	5.7
Duration, T50 (ms)	1.5	1.5	1.5	1.5	1.5
F2 Models (48 - 65klm & 24klm Amber)					
Peak inrush current (A)	15.4	30.8	8.2	9.8	11.4
Duration, T50 (ms)	1.5	1.5	1.5	1.5	1.5

DISCLAIMER. All product information provided is, to the best of Dialight's knowledge, accurate as of the date of publication. When ordering, refer to *www.dialight.com* for current versions of: (a) relevant product documentation (including the relevant product data sheets); (b) Dialight terms and conditions of sale; and, (c) the relevant product warranty. To the extent that any contract is deemed formed between Dialight and the purchaser of Dialight products and/or an end-user, versions of documents available at *www.dialight.com* as at the date of sale shall be the versions incorporated therein. In the event of any discrepancy between this document or information provided at *www.dialight.com*, the latter shall prevail.

Maximum per Circuit Breaker

120 VAC			
Lumen Output	10 Amp	16 Amp	20 Amp
12,000	9	14	17
18,000	6	9	11
24,000	4	6	8
30,000 F1	3	5	6
36,000	3	5	6
48,000	2	3	4
60,000	1	2	3
12,000 Amber	3	5	6
24,000 Amber	2	2	3

240 VAC		
10 Amp	16 Amp	20 Amp
17	28	35
11	18	23
8	13	16
6	10	12
6	10	12
4	7	8
3	5	6
6	10	13
3	5	6

277 VAC			
Lumen Output	10 Amp	16 Amp	20 Amp
12,000	20	32	40
18,000	13	21	26
24,000	9	15	19
30,000 F1	7	11	14
36,000	7	11	14
48,000	5	8	9
60,000	3	5	7
12,000 Amber	7	12	14
24,000 Amber	4	6	7

415 VAC		
10 Amp	16 Amp	20 Amp
29	47	58
19	31	38
14	22	27
10	17	21
10	16	20
7	11	14
5	8	10
11	17	21
5	8	10

Dialight recommends using B or C type breakers.
These tables are based on steady-state input current and nominal breaker current ratings @ 80% derating.

DISCLAIMER. All product information provided is, to the best of Dialight's knowledge, accurate as of the date of publication. When ordering, refer to *www.dialight.com* for current versions of: (a) relevant product documentation (including the relevant product data sheets); (b) Dialight terms and conditions of sale; and, (c) the relevant product warranty. To the extent that any contract is deemed formed between Dialight and the purchaser of Dialight products and/or an end-user, versions of documents available at *www.dialight.com* as at the date of sale shall be the versions incorporated therein. In the event of any discrepancy between this document or information provided at *www.dialight.com*, the latter shall prevail.

Beam Distribution

Medium - 55°

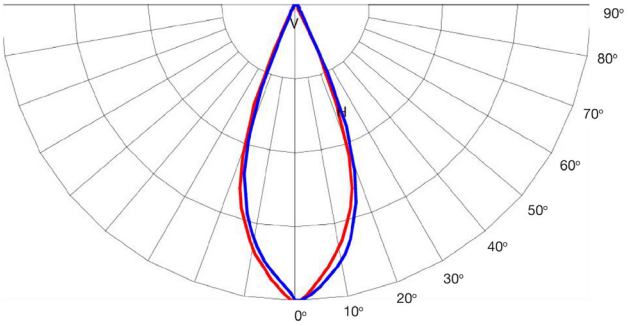

Wide - 125°

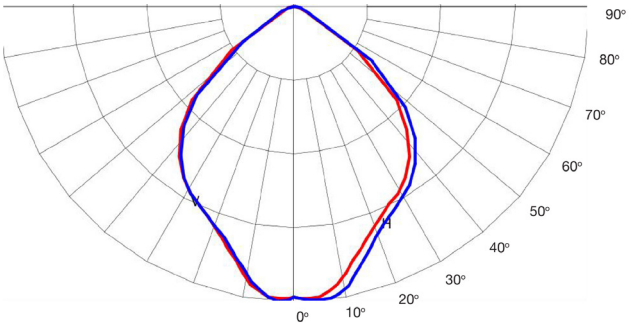

Asymmetric - Forward Distribution

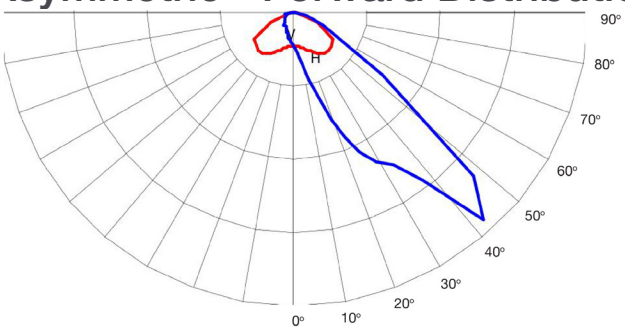

DISCLAIMER. All product information provided is, to the best of Dialight's knowledge, accurate as of the date of publication. When ordering, refer to *www.dialight.com* for current versions of: (a) relevant product documentation (including the relevant product data sheets); (b) Dialight terms and conditions of sale; and, (c) the relevant product warranty. To the extent that any contract is deemed formed between Dialight and the purchaser of Dialight products and/or an end-user, versions of documents available at *www.dialight.com* as at the date of sale shall be the versions incorporated therein. In the event of any discrepancy between this document or information provided at *www.dialight.com*, the latter shall prevail.

Lumen Maintenance Factor - F1

F1 Floodlight 12k lm (Hours)									
Ambient	0	15000	30000	45000	60000	75000	90000	100000	150000
25°C	100%	98%	97%	96%	96%	95%	94%	93%	91%
30°C	99%	97%	96%	95%	95%	94%	93%	92%	90%
35°C	98%	96%	96%	95%	95%	94%	93%	92%	90%
40°C	98%	96%	95%	94%	94%	93%	92%	91%	89%
45°C	97%	95%	94%	93%	93%	92%	91%	90%	88%
50°C	96%	94%	94%	93%	93%	92%	91%	90%	88%
55°C	96%	94%	93%	92%	91%	90%	90%	89%	87%
60°C	95%	93%	92%	91%	91%	90%	89%	89%	86%
65°C	94%	92%	92%	91%	90%	89%	88%	88%	85%

F1 Floodlight 18k lm (Hours)									
Ambient	0	15000	30000	45000	60000	75000	90000	100000	150000
25°C	100%	98%	97%	96%	96%	95%	94%	93%	91%
30°C	99%	97%	96%	95%	95%	94%	93%	92%	90%
35°C	98%	96%	96%	95%	95%	94%	93%	92%	90%
40°C	98%	96%	95%	94%	94%	93%	92%	91%	89%
45°C	97%	95%	94%	93%	93%	92%	91%	90%	88%
50°C	96%	94%	94%	93%	93%	92%	91%	90%	88%
55°C	96%	94%	93%	92%	91%	90%	90%	89%	87%
60°C	95%	93%	92%	91%	91%	90%	89%	89%	86%
65°C	94%	92%	92%	91%	90%	89%	88%	88%	85%

F1 Floodlight 30k lm (Hours)									
Ambient	0	15000	30000	45000	60000	75000	90000	100000	150000
25°C	100%	98%	95%	93%	91%	89%	87%	85%	79%
30°C	99%	97%	94%	92%	90%	88%	86%	84%	78%
35°C	98%	96%	93%	91%	89%	87%	85%	83%	77%
40°C	97%	94%	92%	90%	88%	85%	83%	82%	76%
45°C	96%	93%	91%	88%	86%	84%	82%	81%	74%
50°C	94%	92%	90%	87%	85%	83%	81%	79%	72%
55°C	93%	91%	88%	86%	84%	81%	79%	78%	71%
60°C	92%	90%	87%	85%	82%	80%	78%	76%	70%
65°C	91%	88%	86%	84%	81%	79%	77%	75%	68%

DISCLAIMER. All product information provided is, to the best of Dialight's knowledge, accurate as of the date of publication. When ordering, refer to *www.dialight.com* for current versions of: (a) relevant product documentation (including the relevant product data sheets); (b) Dialight terms and conditions of sale; and, (c) the relevant product warranty. To the extent that any contract is deemed formed between Dialight and the purchaser of Dialight products and/or an end-user, versions of documents available at *www.dialight.com* as at the date of sale shall be the versions incorporated therein. In the event of any discrepancy between this document or information provided at *www.dialight.com*, the latter shall prevail.

Lumen Maintenance Factor - F2

F2 Floodlight 36k lm (Hours)									
Ambient	0	15000	30000	45000	60000	75000	90000	100000	150000
25°C	100%	98%	97%	96%	96%	95%	94%	93%	91%
30°C	99%	97%	96%	96%	95%	94%	93%	93%	90%
35°C	98%	97%	96%	95%	94%	93%	92%	92%	89%
40°C	98%	96%	95%	94%	93%	93%	92%	91%	89%
45°C	97%	95%	94%	94%	93%	92%	91%	91%	88%
50°C	96%	94%	94%	93%	92%	91%	90%	90%	87%
55°C	96%	94%	93%	92%	91%	90%	90%	89%	87%
60°C	95%	93%	92%	91%	91%	90%	89%	88%	86%
65°C	94%	92%	92%	91%	90%	89%	88%	88%	85%

F2 Floodlight 60k lm (Hours)									
Ambient	0	15000	30000	45000	60000	75000	90000	100000	150000
25°C	100%	98%	95%	93%	91%	89%	87%	85%	79%
30°C	99%	96%	94%	92%	90%	88%	86%	84%	78%
35°C	98%	95%	93%	91%	88%	86%	84%	83%	76%
40°C	96%	94%	92%	89%	87%	85%	83%	81%	75%
45°C	95%	93%	90%	88%	86%	83%	81%	80%	73%
50°C	94%	91%	89%	87%	84%	82%	80%	78%	72%
55°C	93%	90%	88%	85%	83%	80%	78%	77%	70%

DISCLAIMER. All product information provided is, to the best of Dialight's knowledge, accurate as of the date of publication. When ordering, refer to *www.dialight.com* for current versions of: (a) relevant product documentation (including the relevant product data sheets); (b) Dialight terms and conditions of sale; and, (c) the relevant product warranty. To the extent that any contract is deemed formed between Dialight and the purchaser of Dialight products and/or an end-user, versions of documents available at *www.dialight.com* as at the date of sale shall be the versions incorporated therein. In the event of any discrepancy between this document or information provided at *www.dialight.com*, the latter shall prevail.

Dimensional Drawings

F1 Slipfitter Bracket - UL 1598/A

(7.5° tilt adjustment)

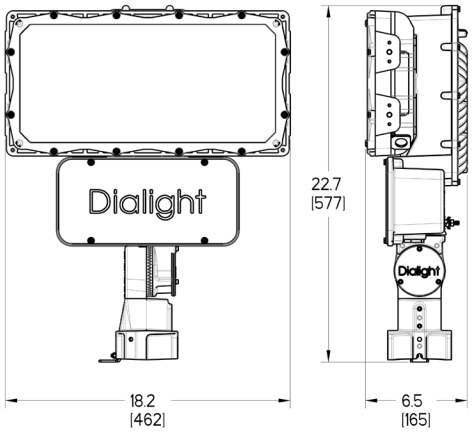

F1 Slipfitter Bracket - UL 844 (CID2 Only)

(7.5° tilt adjustment)

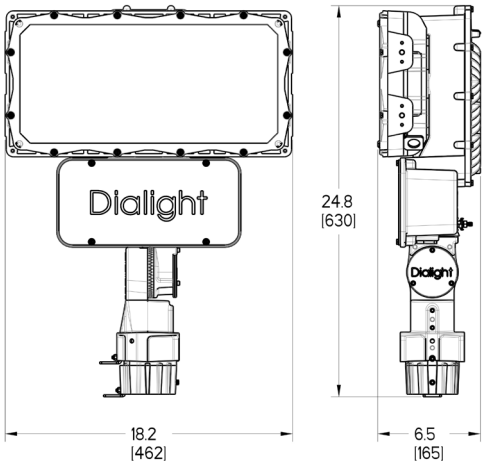

F1 Straight Bracket

(7.5° tilt adjustment)

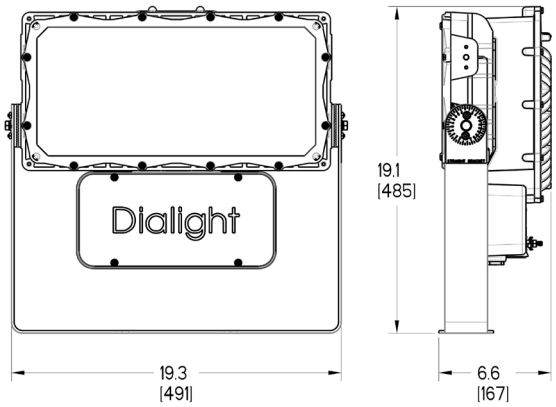

F2 Straight Bracket

(7.5° tilt adjustment)

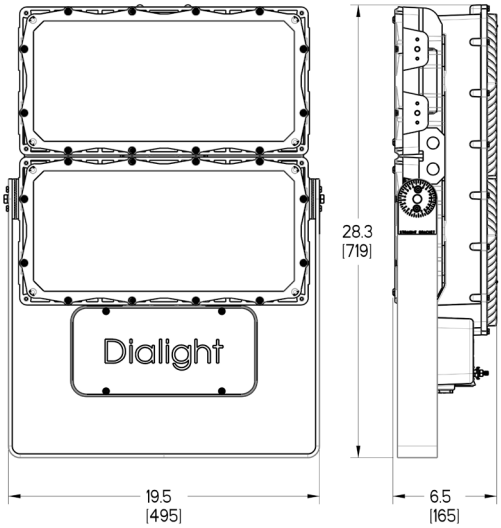

Prosite Floodlight Heavy Duty Bracket

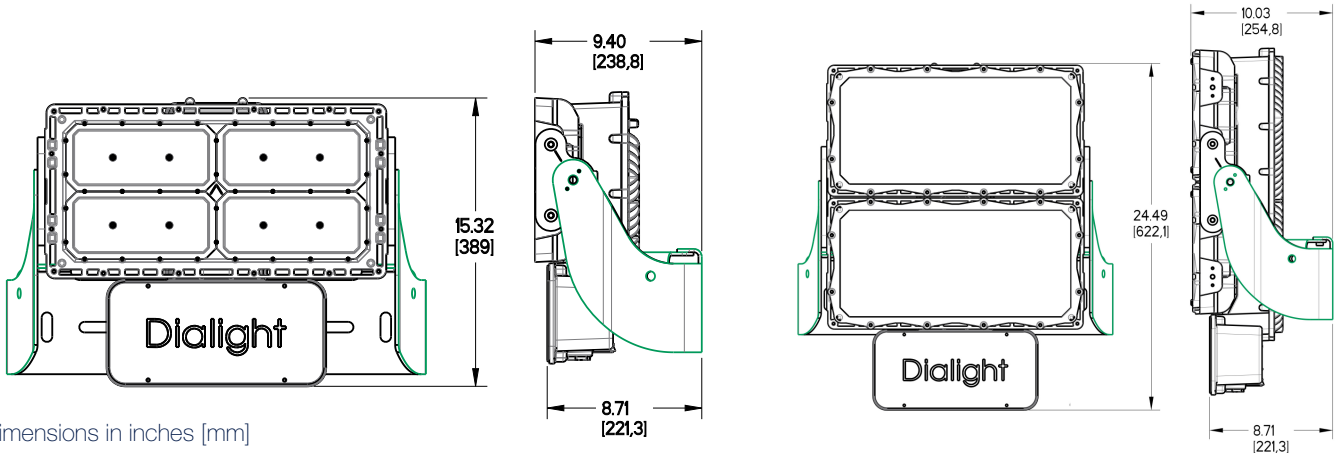

Dimensions in inches [mm]

DISCLAIMER. All product information provided is, to the best of Dialight's knowledge, accurate as of the date of publication. When ordering, refer to *www.dialight.com* for current versions of: (a) relevant product documentation (including the relevant product data sheets); (b) Dialight terms and conditions of sale; and, (c) the relevant product warranty. To the extent that any contract is deemed formed between Dialight and the purchaser of Dialight products and/or an end-user, versions of documents available at *www.dialight.com* as at the date of sale shall be the versions incorporated therein. In the event of any discrepancy between this document or information provided at *www.dialight.com*, the latter shall prevail.

Dimensional Drawings

F1 Mounting Bracket

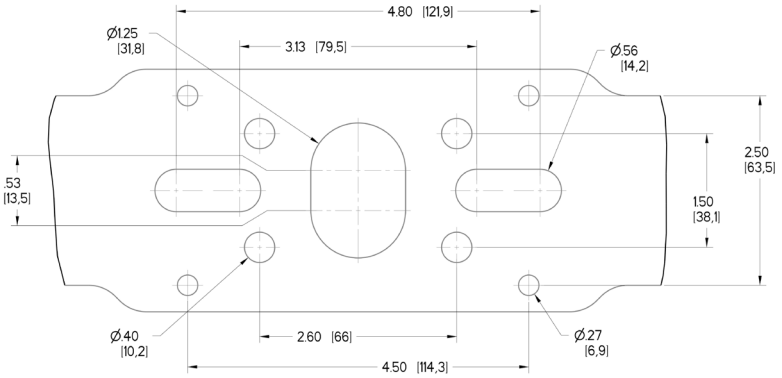

F2 Mounting Bracket

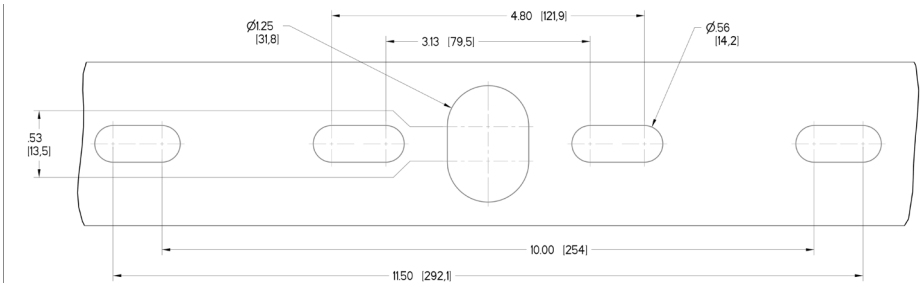

F1 and F2 Heavy-Duty Bracket

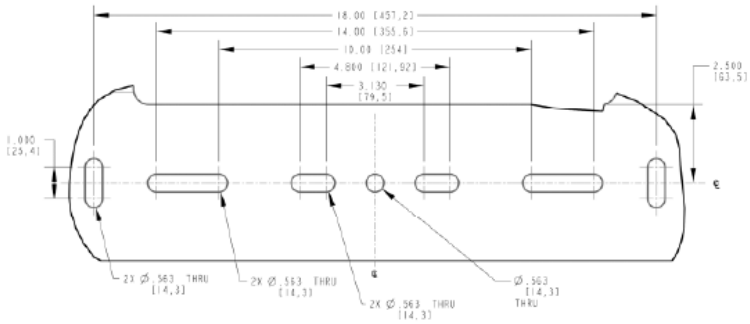

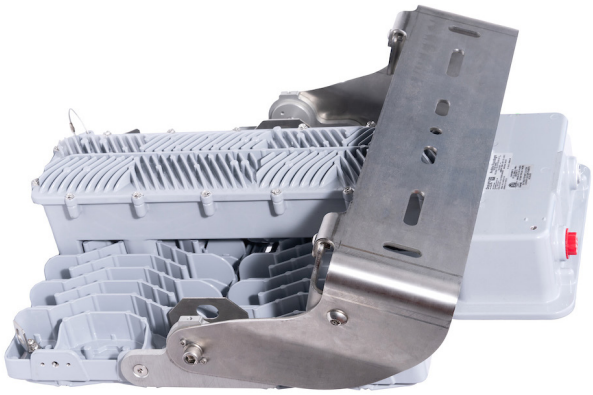

Dimensions in inches [mm]

DISCLAIMER. All product information provided is, to the best of Dialight's knowledge, accurate as of the date of publication. When ordering, refer to *www.dialight.com* for current versions of: (a) relevant product documentation (including the relevant product data sheets); (b) Dialight terms and conditions of sale; and, (c) the relevant product warranty. To the extent that any contract is deemed formed between Dialight and the purchaser of Dialight products and/or an end-user, versions of documents available at *www.dialight.com* as at the date of sale shall be the versions incorporated therein. In the event of any discrepancy between this document or information provided at *www.dialight.com*, the latter shall prevail.

Accessories

F1NVISOR
- F1 visor NEMA optics

F2NVISOR
- F2 visor NEMA optics

F2AVISOR
- F2 visor asymmetric optics
- Not suitable for asymmetric wide optic

H6XCAB72[1]
- 72” stainless steel safety rope
- Kit includes: (1) cable

H6XCAB60[1]
- 60” stainless steel safety rope
- Kit includes: (1) cable

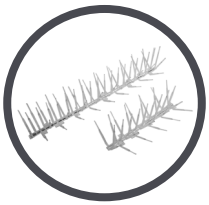

F1SPIKES
F2SPIKES
- Bird spikes

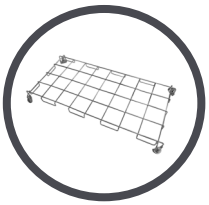

FLWG
- Wire guard
- Kit includes (1) assembly

SLPC01R
- Photocell, 105-305 VAC

SLPC02R
- Photocell, 312-382 VAC

SLPC03R
- Photocell, 432-528 VAC

[1]F1 models require 1 cable per unit. F2 models require 2 cables per unit.

Replacements*

Replacement Power Supplies	
Part Number	Description
F1PS2B	120-277V Power Supply, 12k lm
F1PS2C	120-277V Power Supply, 18k lm
F1PS2E	120-277V Power Supply, 24k lm
F1PS2F	120-277V Power Supply, 30k lm
F2PS2N	120-277V Power Supply, 60k lm
F1PS5B	347-480V Power Supply, 12k lm
F1PS5C	347-480V Power Supply, 18k lm
F1PS5E	347-480V Power Supply, 24k lm
F1PS5F	347-480V Power Supply, 30k lm
F2PS5N	347-480V Power Supply, 60k lm

FL10KV277
- 10kA surge protection 100-277V

FL10KV480
- 10kA surge protection 347-480V

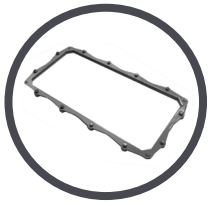

FLGLASSLG
- Glass lens, grey
- Kit includes (1) assembly

*Replacements parts for CE models only.

DISCLAIMER. All product information provided is, to the best of Dialight’s knowledge, accurate as of the date of publication. When ordering, refer to *www.dialight.com* for current versions of: (a) relevant product documentation (including the relevant product data sheets); (b) Dialight terms and conditions of sale; and, (c) the relevant product warranty. To the extent that any contract is deemed formed between Dialight and the purchaser of Dialight products and/or an end-user, versions of documents available at *www.dialight.com* as at the date of sale shall be the versions incorporated therein. In the event of any discrepancy between this document or information provided at *www.dialight.com*, the latter shall prevail.

Australia
108 Howe Street
Osborne Park, WA 6017
Tel: +61 (0) 8 9244 7600
Fax: +61 (0) 8 9244 7601
info@dialight.com.au

Southeast Asia
56 Kallang Pudding Road
#09 – 08 HH@Kallang
Singapore 349328
Tel: +65 6578 7271
Fax: +65 6578 7150
enquiry@dialight.com.sg

WARNING / DISCLAIMERS:
Installation & secondary retention. The use of this product without proper installation (including secondary retention / netting) and periodic inspections, could cause severe injury or death. Dialight recommends that all installations should use secondary retention / netting (appropriate to the installation environment) as applicable. Dialight products are intended for ultimate purchase, installation and operation by knowledgeable persons trained in the functional assessment, installation, use and maintenance of such products and all customers (including but not limited to end customers) are responsible for assessing the suitability of Dialight products for any given installation requirement. It is the exclusive responsibility of the contractor, installer and/or end-user to: (a) determine the suitability of the product for its intended application; and, (b) ensure that the product is safely installed (with secondary retention / netting as appropriate) and in compliance with all applicable laws and regulations.
Product specifications & warranties. All product information provided is, to the best of Dialight's knowledge, accurate as of the date of publication. All values and performance data herein are design or typical values when measured under laboratory conditions. The information herein is subject to change without notice. The products / software detailed herein are subject to applicable warranties and terms and conditions of use/purchase. Unless agreed otherwise in writing by an authorized representative of Dialight, Dialight does not represent that its products are fit for any particular purpose and accepts no liability for the installation and/or unauthorised use of its products. When ordering, refer to *www.dialight.com* for current versions of: (a) relevant product documentation (including relevant product data sheets); (b) Dialight terms and conditions of sale; and, (c) the relevant product warranties. To the extent that any contract is deemed formed between Dialight and the purchaser of Dialight products and/or an end-user, versions of documents available at *www.dialight.com* as at the date of sale shall be the versions incorporated therein. In the event of any discrepancy between this document and information provided at *www.dialight.com*, the latter shall prevail.
Exclusion of liability. To the extent permissible under the relevant law, Dialight disclaims all liability for personal injury and/or other damage resulting from any dislodgment or other dislocation of its products. Whilst Dialight has used its reasonable endeavours to ensure the completeness and accuracy of information herein, Dialight does not assume any liability for damages resulting from use of this information or for any third-party representations made in relation to Dialight products.