Dialight

ProSite LED Streetlight

Technical Specification Sheet - APAC

SEPTEMBER 2026

ProSite LED Streetlight - Non-Hazardous

S1 Models

Certifications & Ratings

- 10 year warranty
- CE / ENEC / RCM
- IP66/67
- IK10 - Integrated PC optic only
- IK08 - Glass lens
- L70 > 150,000 hours @ 25°C ambient

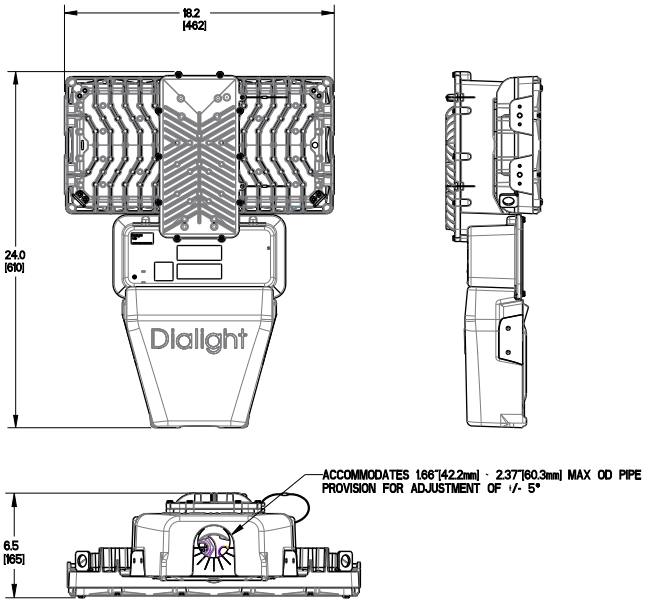

Dimensions in inches [mm]
Additional dimensional drawings on page 8

Mechanical Information:

Fixture weight:	11.0 - 15.5 kg
Shipping weight:	14.3 - 18.8 kg
EPA (sq. m):	0.103
Mounting:	Cast aluminum mast arm bracket - suits 42.2-60.3mm OD pipe (-5°, 0°, +5° tilt settings) Slipfitter bracket (7.5° tilt adjustment, for vertical pole mount only)
Cable entry:	1 x M25

Electrical Specifications:

Operating voltage:	120-277VAC / 120-250VDC 347-415-480 VAC
Operating temp:	-40°C to +65°C
EMC:	CISPR 15 Flicker: IEC 61000-3-3 Immunity requirements for lighting: IEC 61547 Harmonics: IEC 61000-3-2 Class C
Transient protection: Optional:	6kV/3kA Additional surge protection module rated for 10kA, 20kA single strike
THD:	< 20%
Power Factor:	> 0.9
Dimming:	DALI 1 and DALI 2 compatible / 0-10V DC
Auto switching:	NEMA 3-pin receptacle with shorting cap (photocell sold separately)

Construction:

Housing:	A360 Die-cast aluminum
Hardware:	316 stainless steel
Finish:	Superior epoxy and polyester dual coat finish
Lens:	Integrated PC Optic/Lens, Glass Lens Cover

Photometric Information:

CRI:	70
CCT:	5000K (cool white) 4000K (neutral white) 2200K (warm white) 2700K (warm white) - 80 CRI only Amber
Beam pattern:	Type III Medium Type V

All values typical unless otherwise stated (tolerance +/- 10%)

WARNING - INSTALLATION & SECONDARY RETENTION. Use of any Dialight products without proper installation (including secondary retention / netting) and periodic inspections could cause severe injury or death. Dialight recommends that all installations should use secondary retention / netting (appropriate to the installation environment) where applicable. It is the exclusive responsibility of the contractor, installer and/or end-user to: (a) determine the suitability of the product for its intended application; and, (b) ensure that the product is safely installed (with secondary retention / netting where appropriate) and in compliance with all applicable laws and regulations. To the extent permissible under applicable laws, Dialight disclaims all liability for personal injury and/or other damage resulting from any dislodgment or other dislocation of its products.

Ordering Information

ProSite LED Streetlight - Non-Hazardous

Industrial - 120-277 VAC								
Part Number	Fixture Lumens	Wattage	Efficacy	Voltage	CCT/CRI	Lens	Optic	Receptacle with Cap
ProSite Streetlight 12,000lm								
S1E-NQB2-BSTN-VGN	12,300	81	152	120-277VAC	CW 5000K - 70 CRI	PC Optic Only	Type III Medium	Yes
S1E-NQL2-BSTN-VGN	12,300	81	152	120-277VAC	NW 4000K - 70 CRI	PC Optic Only	Type III Medium	Yes
S1E-NQW2-BSTN-VGN	10,000	81	123	120-277VAC	WW 2700K - 80 CRI	PC Optic Only	Type III Medium	Yes
ProSite Streetlight 18,000lm								
S1E-NQB2-CSTN-VGN	17,800	124	144	120-277VAC	CW 5000K - 70 CRI	PC Optic Only	Type III Medium	Yes
S1E-NQL2-CSTN-VGN	17,800	124	144	120-277VAC	NW 4000K - 70 CRI	PC Optic Only	Type III Medium	Yes
S1E-NQW2-CSTN-VGN	14,600	124	118	120-277VAC	WW 2700K - 80 CRI	PC Optic Only	Type III Medium	Yes
ProSite Streetlight 24,000lm								
S1E-NQB2-ESTN-VGN	23,400	175	134	120-277VAC	CW 5000K - 70 CRI	PC Optic Only	Type III Medium	Yes
S1E-NQL2-ESTN-VGN	23,400	175	134	120-277VAC	NW 4000K - 70 CRI	PC Optic Only	Type III Medium	Yes
S1E-NQW2-ESTN-VGN	19,100	175	109	120-277VAC	WW 2700K - 80 CRI	PC Optic Only	Type III Medium	Yes
ProSite Streetlight 30,000lm								
S1E-NQB2-FSTN-VGN	29,500	234	126	120-277VAC	CW 5000K - 70 CRI	PC Optic Only	Type III Medium	Yes
S1E-NQL2-FSTN-VGN	29,500	234	126	120-277VAC	NW 4000K - 70 CRI	PC Optic Only	Type III Medium	Yes
S1E-NQW2-FSTN-VGN	24,200	234	103	120-277VAC	WW 2700K - 80 CRI	PC Optic Only	Type III Medium	Yes

All values typical unless otherwise stated (tolerance +/- 10%).
Lens - To add additional lens cover, swap 4th character ‘N to ‘7’ for glass
Optic - For Type V optic change 5th character to a ‘6’.
CCT - 2200K and amber options available, refer to Dialight representative for information.
Voltage - For 347-415-480 VAC change the 7th character to ‘5’.
Surge Protection - For 10kA surge protection 120-277 VAC change 7th character to ‘8’. For 10kA surge protection 347-415-480 VAC change 7th character to ‘9’.
Mounting Bracket - Mast arm bracket supplied as standard. For adjustable slip fitter option, change 10th character to ‘S’.

DISCLAIMER. All product information provided is, to the best of Dialight’s knowledge, accurate as of the date of publication. When ordering, refer to *www.dialight.com* for current versions of: (a) relevant product documentation (including the relevant product data sheets); (b) Dialight terms and conditions of sale; and, (c) the relevant product warranty. To the extent that any contract is deemed formed between Dialight and the purchaser of Dialight products and/or an end-user, versions of documents available at *www.dialight.com* as at the date of sale shall be the versions incorporated therein. In the event of any discrepancy between this document or information provided at *www.dialight.com*, the latter shall prevail.

ProSite LED Streetlight - Hazardous

S1 Models

Certifications & Ratings

- 10 year warranty
- ATEX/IECEx Zone 2, 21 & 22
  - Ex ec IIC T4 Gc
  - Ex tb IIIC T125°C Db
  - ETL25ATEX0529X
  - ETL25ATEX0528X
  - IECEx ETL 22.0001X
- IP66/67
- IK08 - Glass lens
- L70 > 150,000 hours @ 25°C ambient

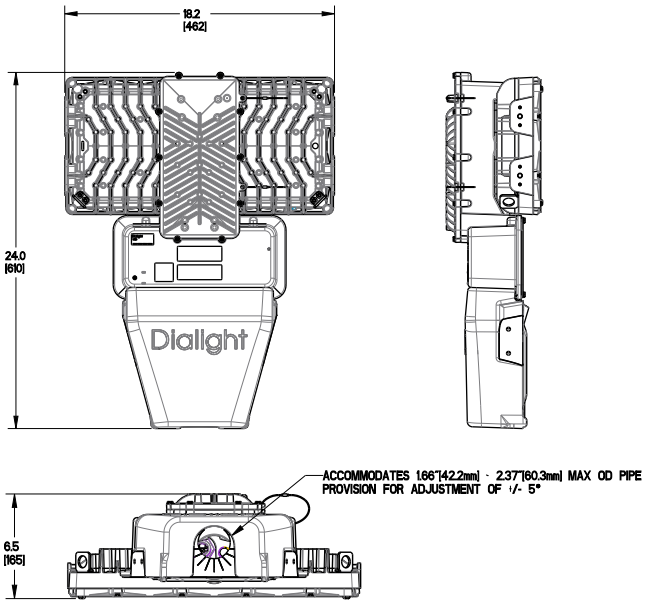

Dimensions in inches [mm]
Additional dimensional drawings on page 8

Mechanical Information:

Fixture weight:	15.5 kg
Shipping weight:	18.8 kg
EPA (sq. m):	0.103
Mounting:	Cast aluminum mast arm bracket - suits 42.2-60.3mm OD pipe (-5°, 0°, +5° tilt settings)
Cable entry:	1 x M25

Electrical Specifications:

Operating voltage:	120-277VAC / 120-250VDC
Operating temp:	-40°C to +65°C
EMC:	CISPR 15 Flicker: IEC 61000-3-3 Immunity requirements for lighting: IEC 61547 Harmonics: IEC 61000-3-2 Class C
Transient protection:	6kV/3kA
THD:	< 20%
Power Factor:	> 0.9
Dimming:	DALI 1 and DALI 2 compatible / 0-10V DC

Construction:

Housing:	A360 Die-cast aluminum
Hardware:	316 stainless steel
Finish:	Superior epoxy and polyester dual coat finish
Lens:	Glass Lens Cover

Photometric Information:

CRI:	70
CCT:	5000K (cool white) 4000K (neutral white) 2200K (warm white) 2700K (warm white) - 80 CRI only Amber
Beam pattern:	Type III Medium Type V

All values typical unless otherwise stated (tolerance +/- 10%)

WARNING - INSTALLATION & SECONDARY RETENTION. Use of any Dialight products without proper installation (including secondary retention / netting) and periodic inspections could cause severe injury or death. Dialight recommends that all installations should use secondary retention / netting (appropriate to the installation environment) where applicable. It is the exclusive responsibility of the contractor, installer and/or end-user to: (a) determine the suitability of the product for its intended application; and, (b) ensure that the product is safely installed (with secondary retention / netting where appropriate) and in compliance with all applicable laws and regulations. To the extent permissible under applicable laws, Dialight disclaims all liability for personal injury and/or other damage resulting from any dislodgment or other dislocation of its products.

Ordering Information

ProSite LED Streetlight - Hazardous

Hazardous - 120-277 VAC, ATEX / IECEx							
Part Number	Fixture Lumens	Wattage	Efficacy	Voltage	CCT/CRI	Lens	Optic
ProSite Streetlight 12,000lm							
S1B-7QB2-BDTN-VGN	10,600	81	131	120-277VAC	CW 5000K - 70 CRI	Glass	Type III Medium
S1B-7QL2-BDTN-VGN	10,600	81	131	120-277VAC	NW 4000K - 70 CRI	Glass	Type III Medium
S1B-7QW2-BDTN-VGN	8,600	81	106	120-277VAC	WW 2700K - 80 CRI	Glass	Type III Medium
ProSite Streetlight 18,000lm							
S1B-7QB2-CDTN-VGN	15,300	124	123	120-277VAC	CW 5000K - 70 CRI	Glass	Type III Medium
S1B-7QL2-CDTN-VGN	15,300	124	123	120-277VAC	NW 4000K - 70 CRI	Glass	Type III Medium
S1B-7QW2-CDTN-VGN	12,500	124	101	120-277VAC	WW 2700K - 80 CRI	Glass	Type III Medium
ProSite Streetlight 24,000lm							
S1B-7QB2-EDTN-VGN	20,000	175	114	120-277VAC	CW 5000K - 70 CRI	Glass	Type III Medium
S1B-7QL2-EDTN-VGN	20,000	175	114	120-277VAC	NW 4000K - 70 CRI	Glass	Type III Medium
S1B-7QW2-EDTN-VGN	16,300	175	93	120-277VAC	WW 2700K - 80 CRI	Glass	Type III Medium
ProSite Streetlight 30,000lm							
S1B-7QB2-FDTN-VGN	25,300	234	108	120-277VAC	CW 5000K - 70 CRI	Glass	Type III Medium
S1B-7QL2-FDTN-VGN	25,300	234	108	120-277VAC	NW 4000K - 70 CRI	Glass	Type III Medium
S1B-7QW2-FDTN-VGN	20,700	234	88	120-277VAC	WW 2700K - 80 CRI	Glass	Type III Medium

All values typical unless otherwise stated (tolerance +/-10%)
Optic - For Type V optic change 5th character to a '6'.
CCT - 2200K and amber options available, refer to Dialight representative for information.
Mounting Bracket - Mast arm bracket supplied as standard.

DISCLAIMER. All product information provided is, to the best of Dialight's knowledge, accurate as of the date of publication. When ordering, refer to *www.dialight.com* for current versions of: (a) relevant product documentation (including the relevant product data sheets); (b) Dialight terms and conditions of sale; and, (c) the relevant product warranty. To the extent that any contract is deemed formed between Dialight and the purchaser of Dialight products and/or an end-user, versions of documents available at *www.dialight.com* as at the date of sale shall be the versions incorporated therein. In the event of any discrepancy between this document or information provided at *www.dialight.com*, the latter shall prevail.

Lumen Tables

Lumen Output Family	Wattage (120-277 VAC)	Wattage (347-480 VAC)	Optic Character	Optic	PC Optic Only				Glass Lens			
					5000K	4000K	2700K	2200K	5000K	4000K	2700K	2200K
12klm	81	84	Q	Type III Medium	12,342	12,342	10,096	10,404	10,552	10,552	8,632	8,896
			6	Type V	13,200	13,200	10,200	10,400	12,500	12,500	9,500	9,700
18klm	124	128	Q	Type III Medium	17,859	17,859	14,608	15,055	15,269	15,269	12,490	12,872
			6	Type V	19,100	19,100	14,800	15,100	18,000	18,000	13,800	14,000
24klm	175	179	Q	Type III Medium	23,375	23,375	19,121	19,705	19,986	19,986	16,348	16,848
			6	Type V	25,000	25,000	19,400	19,800	23,600	23,600	18,000	18,400
30klm	234	237	Q	Type III Medium	29,546	29,546	24,169	24,907	25,262	25,262	20,664	21,296
			6	Type V	31,600	31,600	24,500	25,000	29,900	29,900	22,800	23,200

Inrush Current

S1 Models					
VAC	120	240	347	415	480
Peak inrush current (A)	7.7	15.4	4.1	4.9	5.7
Duration, T50 (ms)	1.5	1.5	1.5	1.5	1.5

Beam Distribution

Type III Medium

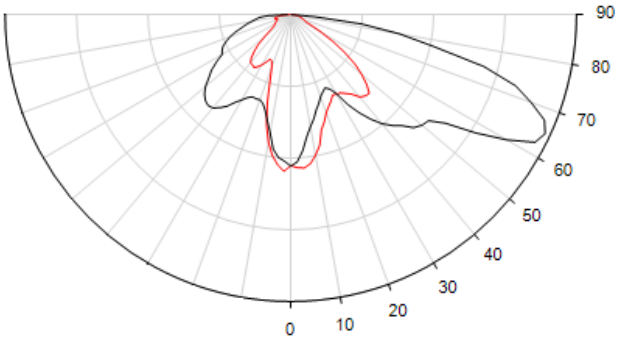

Type V

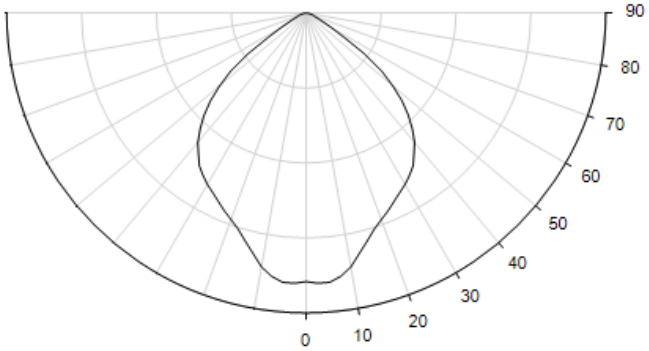

DISCLAIMER. All product information provided is, to the best of Dialight's knowledge, accurate as of the date of publication. When ordering, refer to *www.dialight.com* for current versions of: (a) relevant product documentation (including the relevant product data sheets); (b) Dialight terms and conditions of sale; and, (c) the relevant product warranty. To the extent that any contract is deemed formed between Dialight and the purchaser of Dialight products and/or an end-user, versions of documents available at *www.dialight.com* as at the date of sale shall be the versions incorporated therein. In the event of any discrepancy between this document or information provided at *www.dialight.com*, the latter shall prevail.

Lumen Maintenance Factor - S1

12k lm (Hours)									
Ambient	0	15000	30000	45000	60000	75000	90000	100000	150000
25°C	100%	98%	97%	96%	96%	95%	94%	93%	91%
30°C	99%	97%	96%	95%	95%	94%	93%	92%	90%
35°C	98%	96%	96%	95%	95%	94%	93%	92%	90%
40°C	98%	96%	95%	94%	94%	93%	92%	91%	89%
45°C	97%	95%	94%	93%	93%	92%	91%	90%	88%
50°C	96%	94%	94%	93%	93%	92%	91%	90%	88%
55°C	96%	94%	93%	92%	91%	90%	90%	89%	87%
60°C	95%	93%	92%	91%	91%	90%	89%	89%	86%
65°C	94%	92%	92%	91%	90%	89%	88%	88%	85%

18k lm (Hours)									
Ambient	0	15000	30000	45000	60000	75000	90000	100000	150000
25°C	100%	98%	97%	96%	96%	95%	94%	93%	91%
30°C	99%	97%	96%	95%	95%	94%	93%	92%	90%
35°C	98%	96%	96%	95%	95%	94%	93%	92%	90%
40°C	98%	96%	95%	94%	94%	93%	92%	91%	89%
45°C	97%	95%	94%	93%	93%	92%	91%	90%	88%
50°C	96%	94%	94%	93%	93%	92%	91%	90%	88%
55°C	96%	94%	93%	92%	91%	90%	90%	89%	87%
60°C	95%	93%	92%	91%	91%	90%	89%	89%	86%
65°C	94%	92%	92%	91%	90%	89%	88%	88%	85%

30k lm (Hours)									
Ambient	0	15000	30000	45000	60000	75000	90000	100000	150000
25°C	100%	98%	95%	93%	91%	89%	87%	85%	79%
30°C	99%	97%	94%	92%	90%	88%	86%	84%	78%
35°C	98%	96%	93%	91%	89%	87%	85%	83%	77%
40°C	97%	94%	92%	90%	88%	85%	83%	82%	76%
45°C	96%	93%	91%	88%	86%	84%	82%	81%	74%
50°C	94%	92%	90%	87%	85%	83%	81%	79%	72%
55°C	93%	91%	88%	86%	84%	81%	79%	78%	71%
60°C	92%	90%	87%	85%	82%	80%	78%	76%	70%
65°C	91%	88%	86%	84%	81%	79%	77%	75%	68%

DISCLAIMER. All product information provided is, to the best of Dialight's knowledge, accurate as of the date of publication. When ordering, refer to *www.dialight.com* for current versions of: (a) relevant product documentation (including the relevant product data sheets); (b) Dialight terms and conditions of sale; and, (c) the relevant product warranty. To the extent that any contract is deemed formed between Dialight and the purchaser of Dialight products and/or an end-user, versions of documents available at *www.dialight.com* as at the date of sale shall be the versions incorporated therein. In the event of any discrepancy between this document or information provided at *www.dialight.com*, the latter shall prevail.

Dimensional Drawings

S1 Streetlight

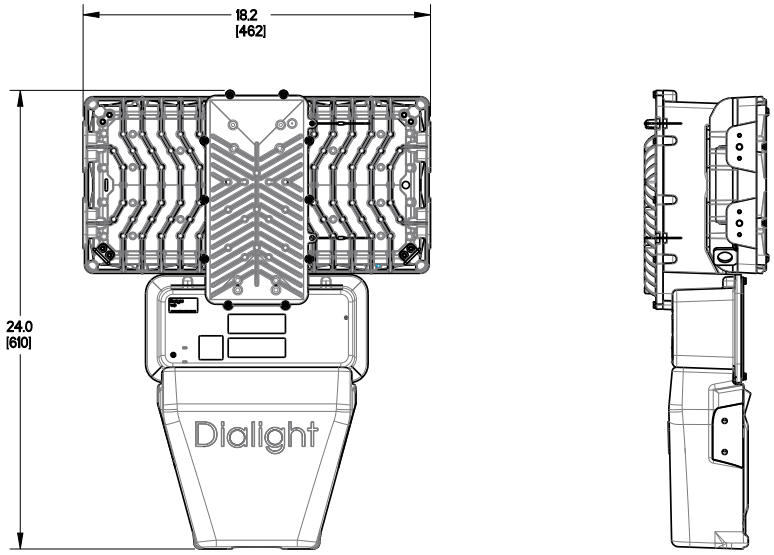

S1 Slipfitter Bracket - CE/RCM

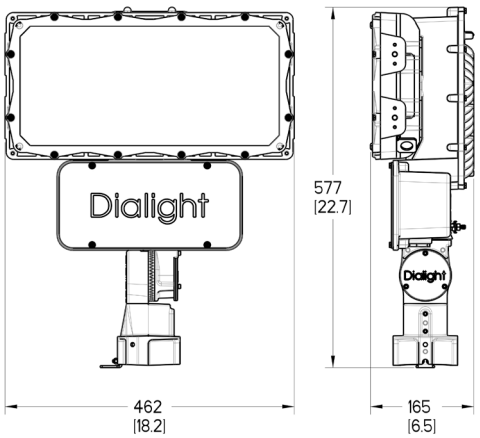

DISCLAIMER. All product information provided is, to the best of Dialight's knowledge, accurate as of the date of publication. When ordering, refer to *www.dialight.com* for current versions of: (a) relevant product documentation (including the relevant product data sheets); (b) Dialight terms and conditions of sale; and, (c) the relevant product warranty. To the extent that any contract is deemed formed between Dialight and the purchaser of Dialight products and/or an end-user, versions of documents available at *www.dialight.com* as at the date of sale shall be the versions incorporated therein. In the event of any discrepancy between this document or information provided at *www.dialight.com*, the latter shall prevail.

Accessories

H6XCAB72[1]
- 72” stainless steel safety rope
- Kit includes: (1) cable

SLPC01R
- Photocell, 105-305 VAC

SLPC02R
- Photocell, 312-382 VAC

SLPC03R
- Photocell, 432-528 VAC

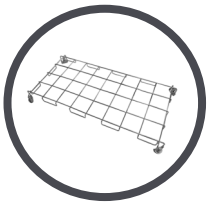

FLWG
- Wire guard
- Kit includes (1) assembly

[1]S1 models require 1 cable per unit.

Replacements

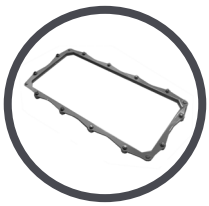

FLGLASSLG
- Glass lens, grey
- Kit includes (1) assembly

FL10KV277
- 10kA surge protection 100-277V

FL10KV480
- 10kA surge protection 347-480V

Replacement Power Supplies	
Part Number	Description
F1PS2B	120-277V Power Supply, 12k lm
F1PS2C	120-277V Power Supply, 18k lm
F1PS2E	120-277V Power Supply, 24k lm
F1PS2F	120-277V Power Supply, 30k lm
F1PS5B	347-480V Power Supply, 12k lm
F1PS5C	347-480V Power Supply, 18k lm
F1PS5E	347-480V Power Supply, 24k lm
F1PS5F	347-480V Power Supply, 30k lm

DISCLAIMER. All product information provided is, to the best of Dialight’s knowledge, accurate as of the date of publication. When ordering, refer to *www.dialight.com* for current versions of: (a) relevant product documentation (including the relevant product data sheets); (b) Dialight terms and conditions of sale; and, (c) the relevant product warranty. To the extent that any contract is deemed formed between Dialight and the purchaser of Dialight products and/or an end-user, versions of documents available at *www.dialight.com* as at the date of sale shall be the versions incorporated therein. In the event of any discrepancy between this document or information provided at *www.dialight.com*, the latter shall prevail.

Australia
108 Howe Street
Osborne Park WA 6017
Tel:+61(0)8 9244 7600
sales@dialight.com.au

Southeast Asia
56 Kallang Pudding Road
#09 – 08 HH@Kallang
Singapore 349328
Tel: +65 6578 7271
Fax: +65 6578 7150
enquiry@dialight.com.sg

WARNING / DISCLAIMERS:
Installation & secondary retention. The use of this product without proper installation (including secondary retention / netting) and periodic inspections, could cause severe injury or death. Dialight recommends that all installations should use secondary retention / netting (appropriate to the installation environment) as applicable. Dialight products are intended for ultimate purchase, installation and operation by knowledgeable persons trained in the functional assessment, installation, use and maintenance of such products and all customers (including but not limited to end customers) are responsible for assessing the suitability of Dialight products for any given installation requirement. It is the exclusive responsibility of the contractor, installer and/or end-user to: (a) determine the suitability of the product for its intended application; and, (b) ensure that the product is safely installed (with secondary retention / netting as appropriate) and in compliance with all applicable laws and regulations.
Product specifications & warranties. All product information provided is, to the best of Dialight's knowledge, accurate as of the date of publication. All values and performance data herein are design or typical values when measured under laboratory conditions. The information herein is subject to change without notice. The products / software detailed herein are subject to applicable warranties and terms and conditions of use/purchase. Unless agreed otherwise in writing by an authorized representative of Dialight, Dialight does not represent that its products are fit for any particular purpose and accepts no liability for the installation and/or unauthorised use of its products. When ordering, refer to *www.dialight.com* for current versions of: (a) relevant product documentation (including relevant product data sheets); (b) Dialight terms and conditions of sale; and, (c) the relevant product warranties. To the extent that any contract is deemed formed between Dialight and the purchaser of Dialight products and/or an end-user, versions of documents available at *www.dialight.com* as at the date of sale shall be the versions incorporated therein. In the event of any discrepancy between this document and information provided at *www.dialight.com*, the latter shall prevail.
Exclusion of liability. To the extent permissible under the relevant law, Dialight disclaims all liability for personal injury and/or other damage resulting from any dislodgment or other dislocation of its products. Whilst Dialight has used its reasonable endeavours to ensure the completeness and accuracy of information herein, Dialight does not assume any liability for damages resulting from use of this information or for any third-party representations made in relation to Dialight products.